BARTELL GLOBAL | PARTS BOOK

WALK-BEHIND TROWELS

BC446

Doc. # PB-B19006
Orig. Rel. – 08/2016
Curr Rev. - 13

BARTELL GLOBAL

www.BartellGlobal.com

CANADA
170 Traders Blvd E
Mississauga, Ontario L4Z 1W7
TEL (647) 953-4100 **FAX** (647) 953-4101

KENTUCKY
4701 Allmond Ave
Louisville, Kentucky 40209
TEL (425) 405-9100 **FAX** (425) 405-9101

UK
Honeyholes Lane
Dunholme, Lincoln, UK LN2 3SU
TEL 01673 860709 **FAX** 01673 861119

NEW JERSEY
200 Commerce Drive, Unit A
Freehold, New Jersey 07728
TEL (848) 225-8100 **FAX** (848) 225-8101

ORIGINAL LANGUAGE OPERATING MANUAL FOR BARTELL RIDE-ON TROWELS

© 2022 Bartell Morrison Inc.
No part of this work may be reproduced or transmitted in any form or by any means, electronic or mechanical, including photocopying and recording, or by any information storage or retrieval system without the prior written permission of Bartell Morrison Inc. unless such copying is permitted by federal copyright laws.

Address inquiries or reference permissions care of:
Bartell Morrison Inc., 170 Traders Blvd E., Mississauga, Ontario, Canada, L4Z 1W7

REV.	DATE	DESCRIPTION	APPROVED BY:
01	02/27/17	Update part numbers	A.L.
02	05/08/17	Added folding handle and Easy Pitch parts list and diagram, rearranged the order of parts list, added 20288 – pulley assembly to handle parts lists. Clutch assembly added. Address update, changed handle asm p/n	AN
03	11/08/17	Updated item12s P/N in parts list 1 from 21772 to 21832	AN
04	02/18	Added decal part numbers, updated handle part numbers/dwgs	AN
05	01/19	Updated P/N's on parts list 10	AN
06	07/19	Updated Easy Pitch P/N's	AN
07	09/19	Updated Address	AN
08	3/20	Correct Item 7 P/N on Parts list 2	AN
09	08/20	Pro Pitch Added	AN
10	04/22	P/N Descriptions Updated	AN
11	05/23	Add Pro Pitch Handle Assembly	AN
12	03/24	Correction Made on Parts List 1	AN
13	04/24	Updated Clutch Part Number	AN

TABLE OF CONTENTS

PARTS LIST 1 – WALK-BEHIND TROWELS 2

GENERAL ASSEMBLY DIAGRAM: BC446 2
GENERAL ASSEMBLY: BC446 - PARTS LIST 1 3

PARTS LIST 2 – WALK-BEHIND TROWELS 4

BASE UNIT ASSEMBLY DIAGRAM: BC446 4
BASE UNIT ASSEMBLY: BC446 - PARTS LIST 2 5

PARTS LIST 3 – WALK-BEHIND TROWELS 6

GEARBOX ASSEMBLY DIAGRAM: 21835 6
GEARBOX ASSEMBLY: 21835 - PARTS LIST 3 7

PARTS LIST 4– WALK-BEHIND TROWELS 8

BC446 CLUTCH ASSEMBLY DIAGRAM: 21029-2* 8
BC446 CLUTCH ASSEMBLY: 21029-2* (1” SHAFT) – PARTS LIST 4 8

PARTS LIST 5 – WALK-BEHIND TROWELS 9

BC446 CLUTCH ASSEMBLY DIAGRAM: 21049* 9
BC446 CLUTCH ASSEMBLY: 21049* (1” SHAFT) – PARTS LIST 5 9

PARTS LIST 6 – WALK-BEHIND TROWELS 11

SPIDER PLATE ASSEMBLY DIAGRAM: 21834 11
SPIDER PLATE ASSEMBLY: 21834 – PARTS LIST 6 11

PARTS LIST 7 – WALK-BEHIND TROWELS 13

PRESSURE PLATE ASSEMBLY DIAGRAM: 13
PRESSURE PLATE ASSEMBLY: PARTS LIST 7 13

PARTS LIST 8: WALK-BEHIND TROWELS 14

HANDLE ASSEMBLY DIAGRAM: 20231C FINE PITCH 14
HANDLE ASSEMBLY: 20231C – PARTS LIST 8 15

PARTS LIST 9: WALK-BEHIND TROWELS 16

HANDLE ASSEMBLY DIAGRAM: 20231E 16
HANDLE ASSEMBLY: 20231E - PARTS LIST 9 17

PARTS LIST 10: WALK-BEHIND TROWELS 18

HANDLE ASSEMBLY DIAGRAM: 20365 PRO PITCH 18
HANDLE ASSEMBLY: 20365 PRO PITCH – PARTS LIST 10 19

PARTS LIST 11 – WALK-BEHIND TROWELS 20

BLADE KIT ASSEMBLY DIAGRAM 20
BC446 BLADES – PARTS LIST 11 20

PARTS LIST 1 – WALK-BEHIND TROWELS

GENERAL ASSEMBLY DIAGRAM: BC446

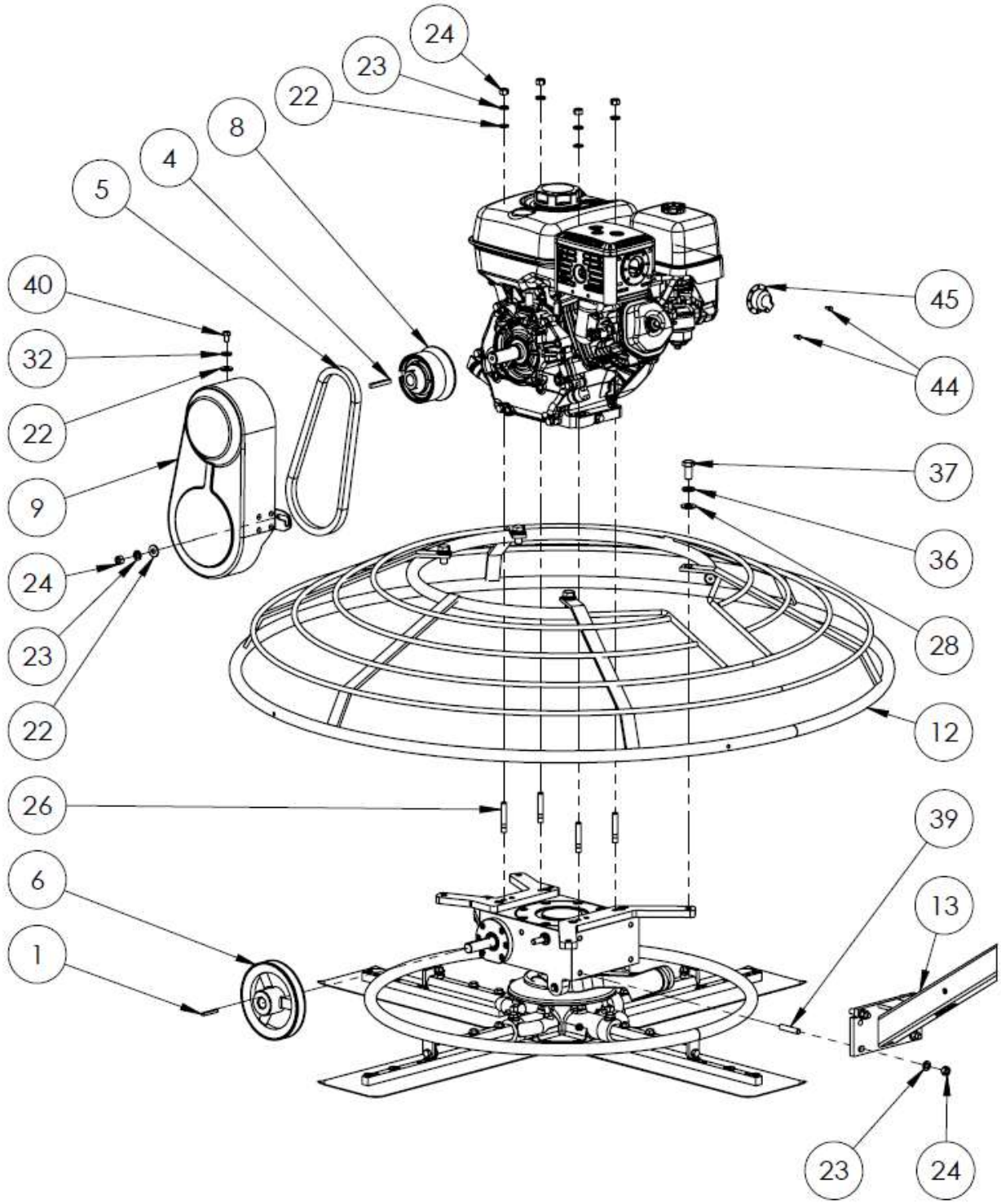

GENERAL ASSEMBLY: BC446 - PARTS LIST 1

Item #	Part #	Description	QTY	Remarks
1	10208	KEY, 3/16” SQ. X 1 1/2” LG	1	7/20/2014
4	10608	KEY, 1/4" SQ. X 1-5/32” LG	1	7/20/2014
5	11178	BELT, B29 (GX270, GX340, GX390)	1	7/20/2014
6	14285	SHEAVE, MB58 X 3/4	1	7/20/2014
8	21049	CLUTCH, 1” BORE	1	4/11/2024
9	21067-1	BELT GUARD, LG	1	7/20/2014
12	21832 20448	GUARD RING, BLUE GUARD RING, CHROME	1	7/20/2014
13	20231C 20231E 20365	HANDLE ASSEMBLY HANDLE ASSEMBLY, EUROPEAN HANDLE ASSEMBLY, PRO PITCH	1	7/20/2014
22	41516	WASHER, FLAT, M10	5	7/20/2014
23	11621	WASHER, LOCK, SPLIT, M10	5	7/20/2014
24	11622	HEX NUT, M10	9	7/20/2014
26	14227	STUD, M10-1.5 X 40MM	4	7/20/2014
28	14267	WASHER, FLAT, M12	4	7/20/2014
32	11621	WASHER, LOCK, SPLIT, M10	1	7/20/2014
36	10735	WASHER, LOCK, M12	4	7/20/2014
37	11900	HHCS, M12-1.75 X 25MM LG	4	7/20/2014
39	21743	STUD, M10-1.5 X 40MM	4	7/20/2014
40	31008	HHCS, M10-1.5 X 20MM LG	1	7/20/2014
44	11112	SCREW, MUFFLER CAP	1	7/20/2014
45	11115	MUFFLER CAP	2	7/20/2014
46	20171	HOIST HOOK (OPTION) (NOT SHOWN)	1	7/20/2014
47	30041	FHSCS, 5/16”-24 X 3/4” (WITH HOIST HOOK)	4	7/20/2014
	01109-BC446-1	DECAL KIT, BC446	1	
	01109-FAM-B	ROUND BARTELL DECAL	1	

PARTS LIST 2 – WALK-BEHIND TROWELS

BASE UNIT ASSEMBLY DIAGRAM: BC446

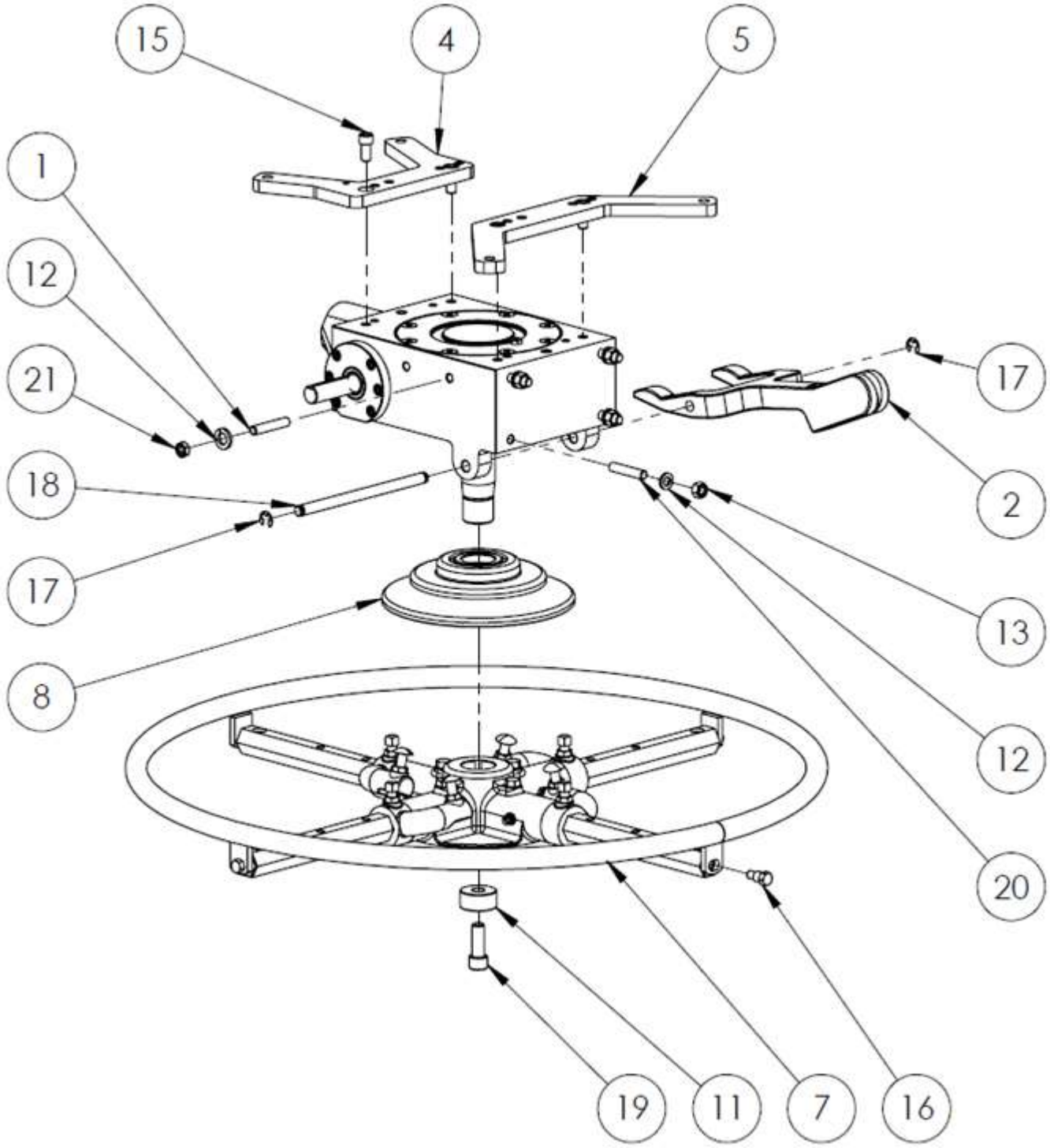

BASE UNIT ASSEMBLY: BC446 - PARTS LIST 2

Item #	Part #	Description	QTY	Remarks
1	21743	STUD, M10-1.5 X 40MM LG	1	7/20/2014
2	10311	YOKE ARM	1	7/20/2014
4	15346-1	MOUNTING RAIL, FRONT	1	7/20/2014
5	15347-1	MOUNTING RAIL, REAR	1	7/20/2014
7	11360	STABILIZER RING, BLUE	1	7/20/2014
8	-	PRESSURE PLATE ASSY (SEE PARTS LIST 5)	1	7/20/2014
11	10804	RETAINER	1	7/20/2014
12	11621	WASHER, LOCK, M10	5	7/20/2014
13	11622	HEX NUT, M10-1.5	4	7/20/2014
15	10072	SHCS, M10-1.5 X 20MM LG	4	7/20/2014
16	51010	SHCS, M8-1.25 x 12MM LG	4	7/20/2014
17	10913	RETAINING RING	2	7/20/2014
18	10914	YOKE PIN	1	7/20/2014
19	11903	SHCS, M12-1.75 X 30MM LG	1	7/20/2014
20	21743	STUD, M10-1.5 X 40MM LG	4	7/20/2014
21	11622	HEX NUT, M10-1.5	1	7/20/2014

PARTS LIST 3 – WALK-BEHIND TROWELS

GEARBOX ASSEMBLY DIAGRAM: 21835

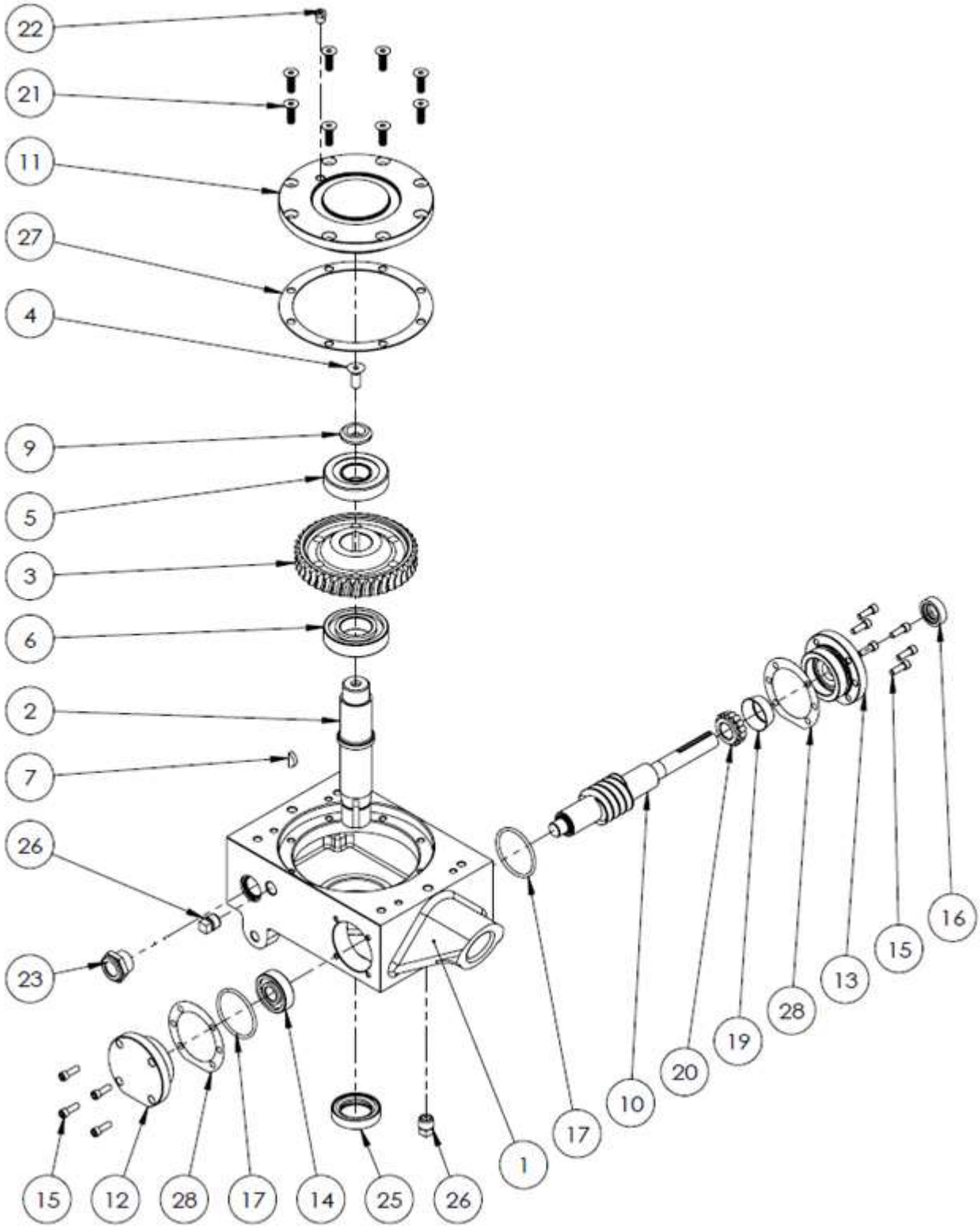

GEARBOX ASSEMBLY: 21835 - PARTS LIST 3

Item #	Part #	Description	QTY	Remarks
1	21839	GEARBOX HOUSING	1	7/20/2014
2	21738	MAIN SHAFT	1	7/20/2014
3	21737	MAIN GEAR	1	7/20/2014
4	10772	FLAT HEAD SCREW, MAINSHAFT	1	7/20/2014
5	10603	BEARING, TAPER	1	7/20/2014
6	14256	BEARING	1	7/20/2014
7	21759	WOODRUFF KEY	1	7/20/2014
9	21734	PRESSURE WASHER	1	7/20/2014
10	21740	COUNTERSHAFT	1	7/20/2014
11	21733	GEARBOX COVER	1	7/20/2014
12	21741	LARGE END CAP	1	7/20/2014
13	21739	LARGE FLANGE	1	7/20/2014
14	31369	BEARING	1	7/20/2014
15	31135	SHCS, M6-1.0 X 16MM LG	10	7/20/2014
16	21749	OIL SEAL	1	7/20/2014
17	21756	O RING	2	7/20/2014
19	21754	BEARING CUP	1	7/20/2014
20		BEARING CONE	1	7/20/2014
21	31106	SHCS, M8-1.25 X 20MM LG	8	7/20/2014
22	21736	RELIEF VALVE	1	7/20/2014
23	10930	SIGHT GLASS	1	7/20/2014
25	21757	OIL SEAL	1	7/20/2014
26	21747	DRAIN PLUG	2	7/20/2014
27	21842-1 21842-2	GASKET, COVER, 0.1MM GASKET, COVER, 0.2MM	A/R	7/20/2014
28	21843-1 21843-2	GASKET, FLANGE, 0.1MM GASKET, FLANGE, 0.2MM	A/R	7/20/2014

PARTS LIST 4– WALK-BEHIND TROWELS

BC446 CLUTCH ASSEMBLY DIAGRAM: 21029-2*

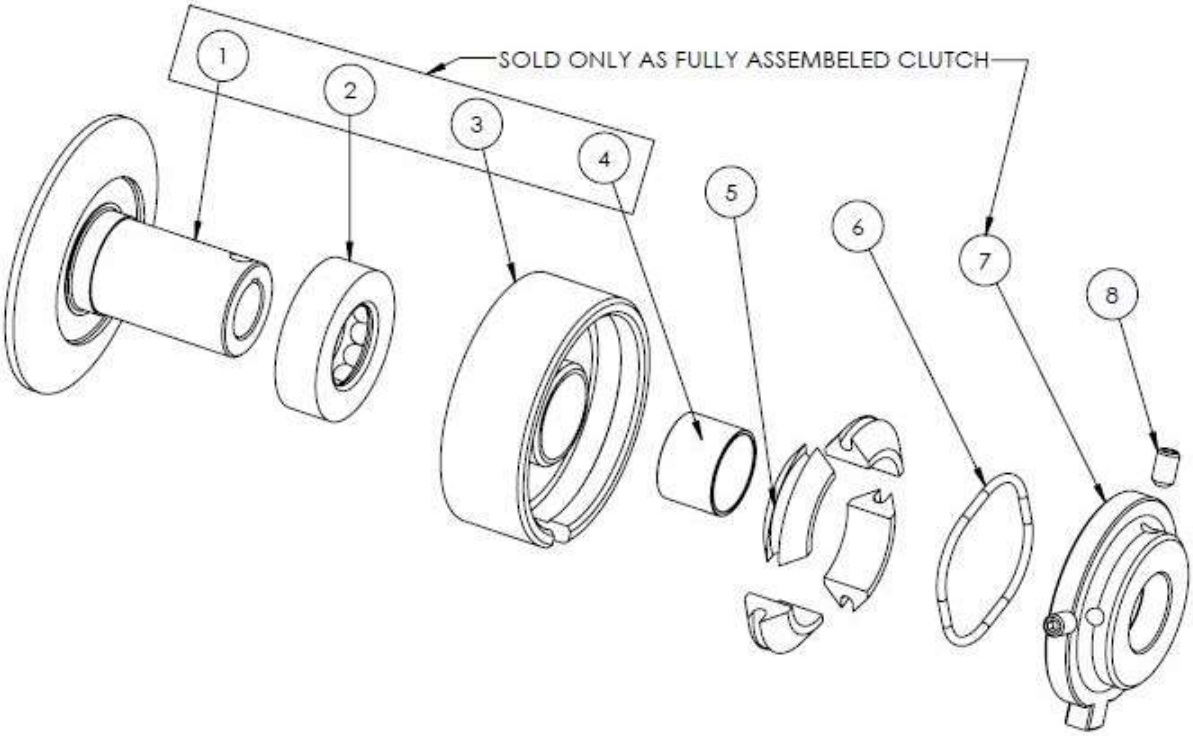

BC446 CLUTCH ASSEMBLY: 21029-2* (1" SHAFT) – PARTS LIST 4

Item #	Part #	Description	QTY	Remarks
1	11045	SPINDLE	1	For Machines S/N:740874 and below
2	11044	BEARING	1	
3	21046	DRUM W/BUSHING	1	
4	11012	BUSHING	1	
5	11014	WEIGHT (SHOE)	4	
6	10759	SPRING	1	
7	11015	FACE PLATE	1	
8	50117	SET SCREW	2	

PARTS LIST 5 – WALK-BEHIND TROWELS

BC446 CLUTCH ASSEMBLY DIAGRAM: 21049*

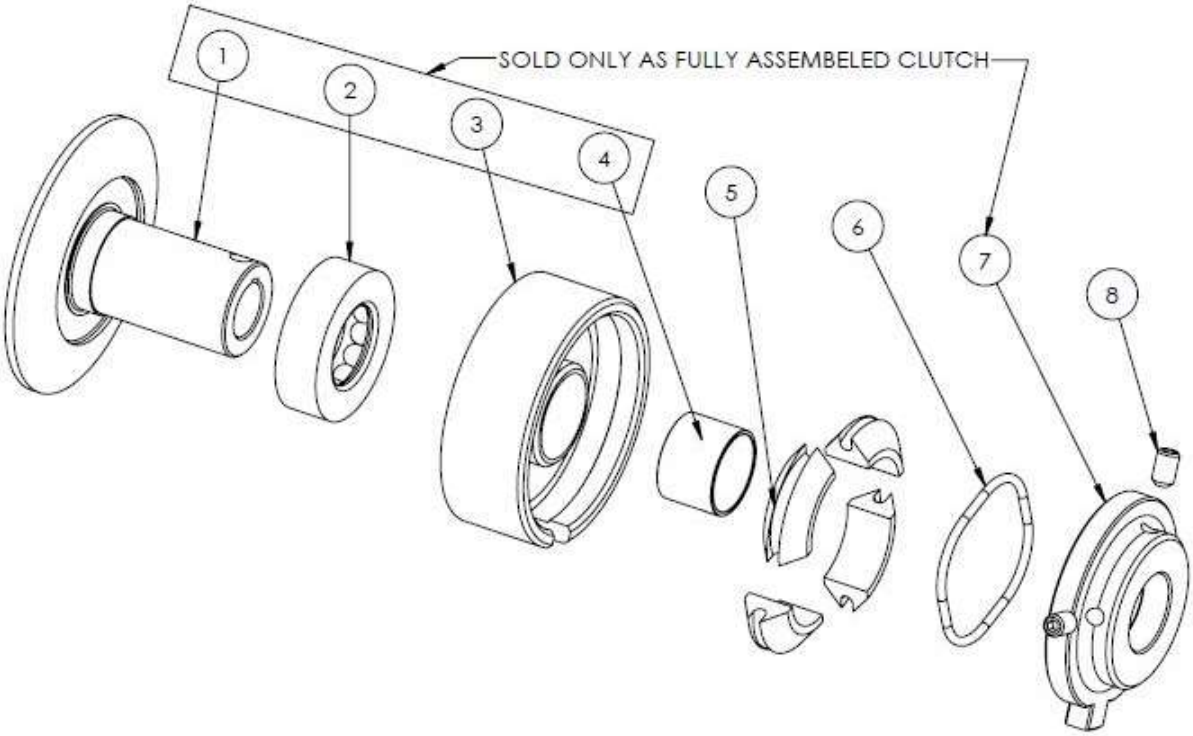

BC446 CLUTCH ASSEMBLY: 21049* (1" SHAFT) – PARTS LIST 5

Item #	Part #	Description	QTY	Remarks
1	11045	SPINDLE	1	For Machines S/N:740874 and below
2	11044	BEARING	1	
3	12051	DRUM	1	
4	11012	BUSHING	1	
5	12052	WEIGHT (SHOE)	4	
6	12053	SPRING	1	
7	11015	FACE PLATE	1	
8	50117	SET SCREW	2	

BARTELL GLOBAL

This Page Intentionally Left Blank

PARTS LIST 6 – WALK-BEHIND TROWELS

SPIDER PLATE ASSEMBLY DIAGRAM: 21834

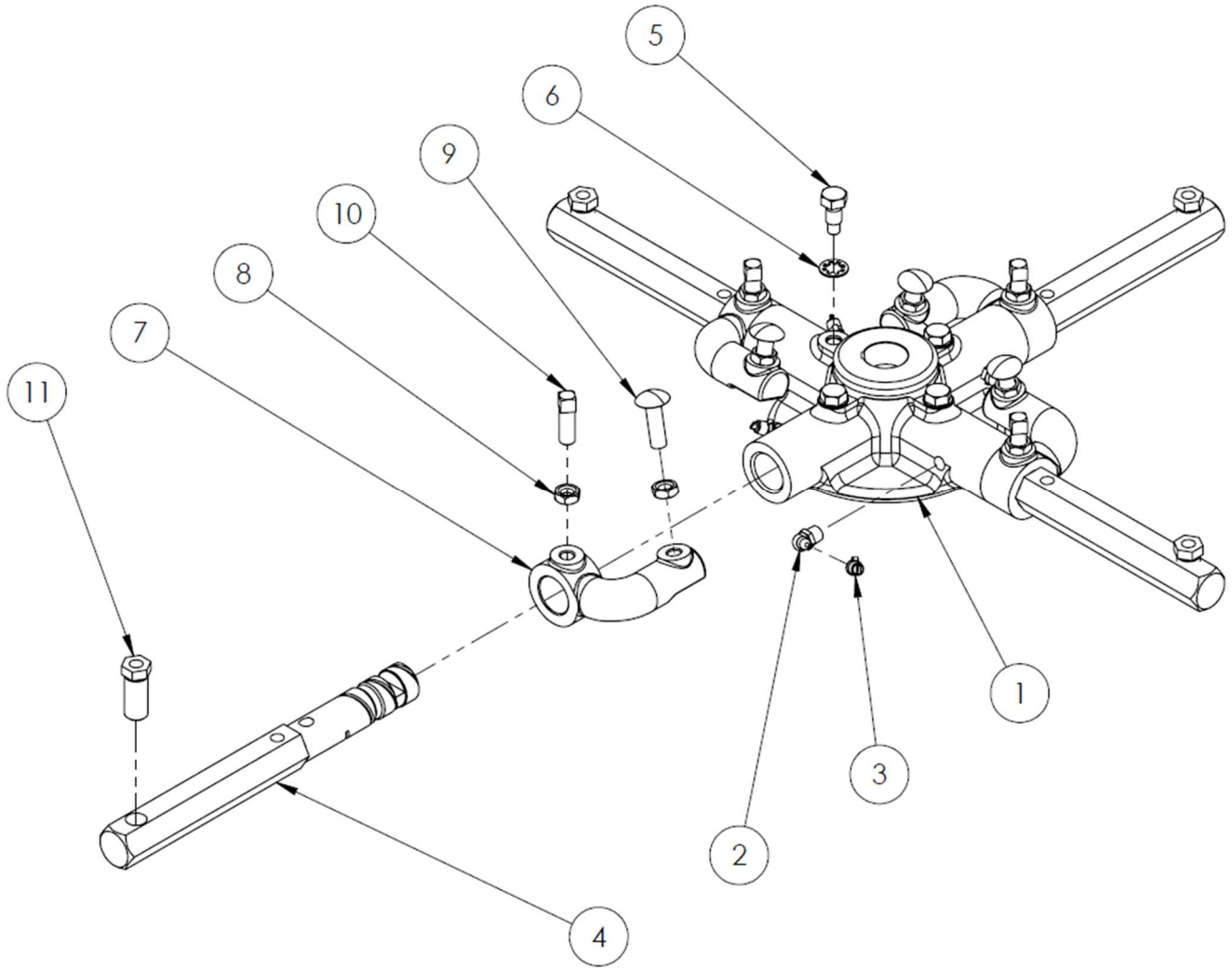

SPIDER PLATE ASSEMBLY: 21834 – PARTS LIST 6

Item #	Part #	Description	QTY	Remarks
1	21762	SPIDER PLATE	1	7/20/2014
2	21769	GREASE FITTING	4	7/20/2014
3	10822	CAP PLUG	4	7/20/2014
4	21833	TROWEL ARM	4	7/20/2014
5	21766	HHCS, M10-1.25 X 20MM LG, DOG POINT	4	7/20/2014
6	10805	LOCKWASHER, INT.	4	7/20/2014
7	21763	LIFT LEVER	4	7/20/2014
8	10867	HEX JAM NUT, M10-1.5	8	7/20/2014
9	10869	CARRIAGE BOLT, M10-1.5 X 35MM LG	4	7/20/2014
10	21765	SHSS, CONE POINT, M10-1.5 X 30MM LG.	4	7/20/2014
11	21811	ADJUSTING SCREW	4	7/20/2014

BARTELL GLOBAL

This Page Intentionally Left Blank

PARTS LIST 7 – WALK-BEHIND TROWELS

PRESSURE PLATE ASSEMBLY DIAGRAM:

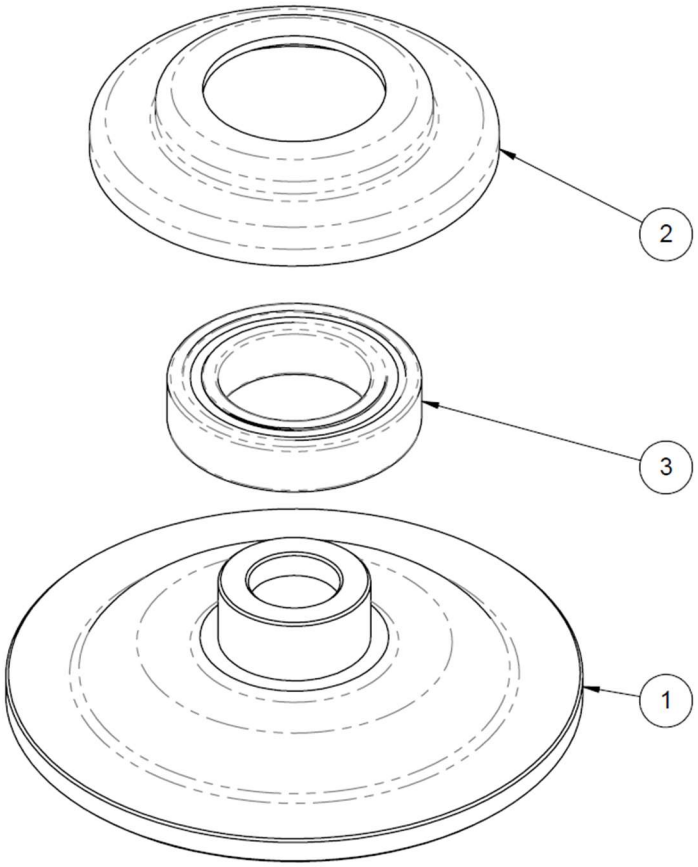

PRESSURE PLATE ASSEMBLY: PARTS LIST 7

Item #	Part #	Description	QTY	Remarks
1	21771	PRESSURE PLATE	1	7/20/2014
2	21770	PRESSURE PLATE CAP	1	7/20/2014
3	21776	THRUST BEARING	1	7/20/2014

PARTS LIST 8: WALK-BEHIND TROWELS

HANDLE ASSEMBLY DIAGRAM: 20231C FINE PITCH

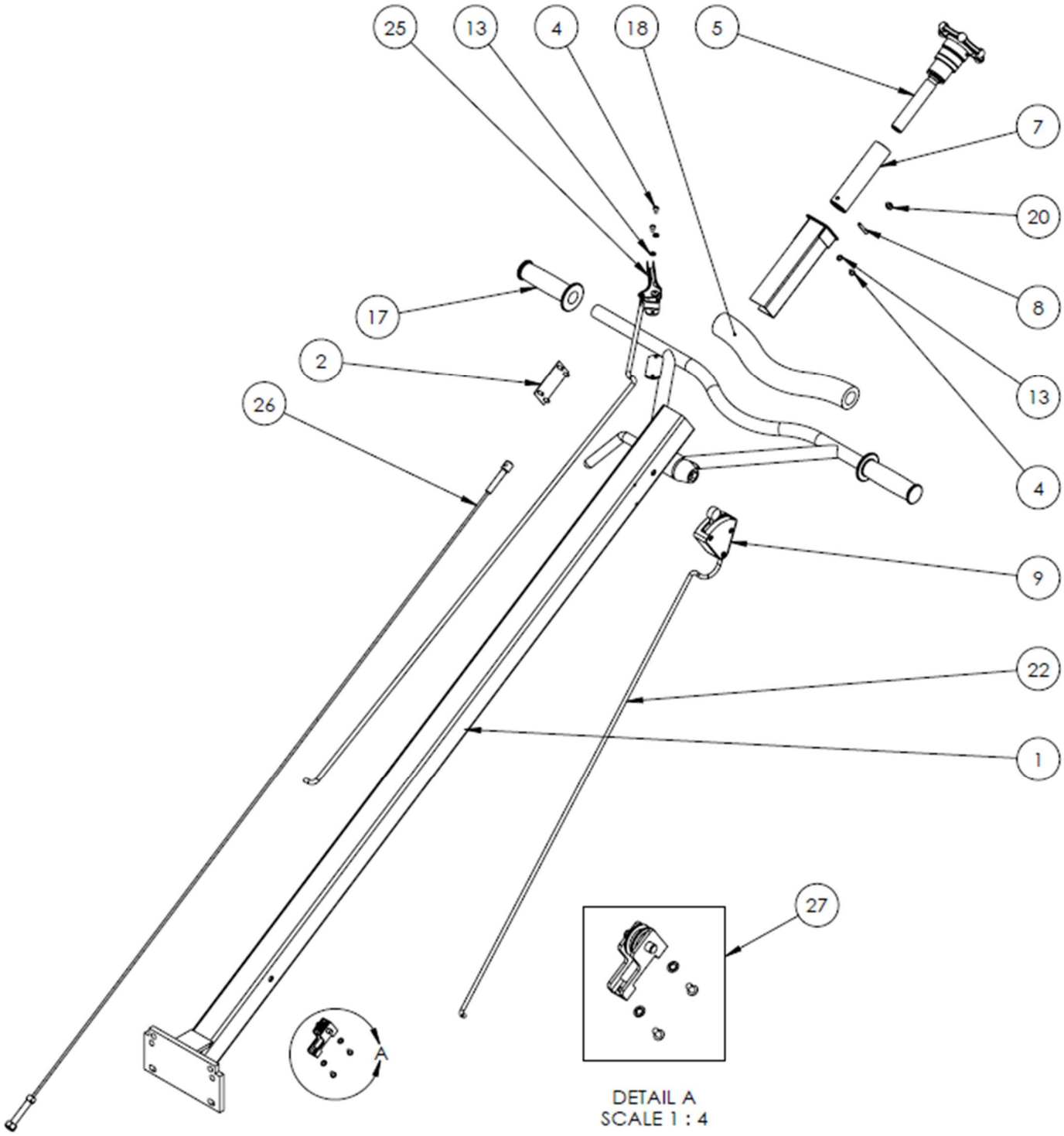

HANDLE ASSEMBLY: 20231C – PARTS LIST 8

Item #	Part #	Description	QTY	Remarks
2	20113	SIDE COVER	1	10/01/2014
3	20112	PITCH INSERT	1	10/01/2014
4	21728	RHMS, M5-0.8 X 8MM LG	5	10/01/2014
5	21714	HAND KNOB ASSEMBLY	1	10/01/2014
7	21722	THREADED SLIDE BUSHING	1	10/01/2014
8	21724	PIN 3/16"DIA X 1-1/4"LG	1	10/01/2014
9	21847	SAFETY SWITCH	1	10/01/2014
13	10703	LOCK WASHER, INTERNAL TOOTH, #10	5	10/01/2014
17	21717	HANDLE GRIP	2	10/01/2014
18	21721	CROSSBAR PAD	1	10/01/2014
20	21725	M6-1.0 X 6MM LG	1	10/01/2014
22	20703	75” WIRE ASSEMBLY	1	10/01/2014
25	10508	THROTTLE LEVER ASSEMBLY, W/ CABLE	1	10/01/2014
26	20332	PITCH CONTROL CABLE, 54 17/32” HOLE TO END OF LUG	1	10/01/2014
27	20288	PULLEY ASSEMBLY	1	10/01/2014
	10525-SQCOM	BARTELL DECAL KIT	1	

PARTS LIST 9: WALK-BEHIND TROWELS

HANDLE ASSEMBLY DIAGRAM: 20231E

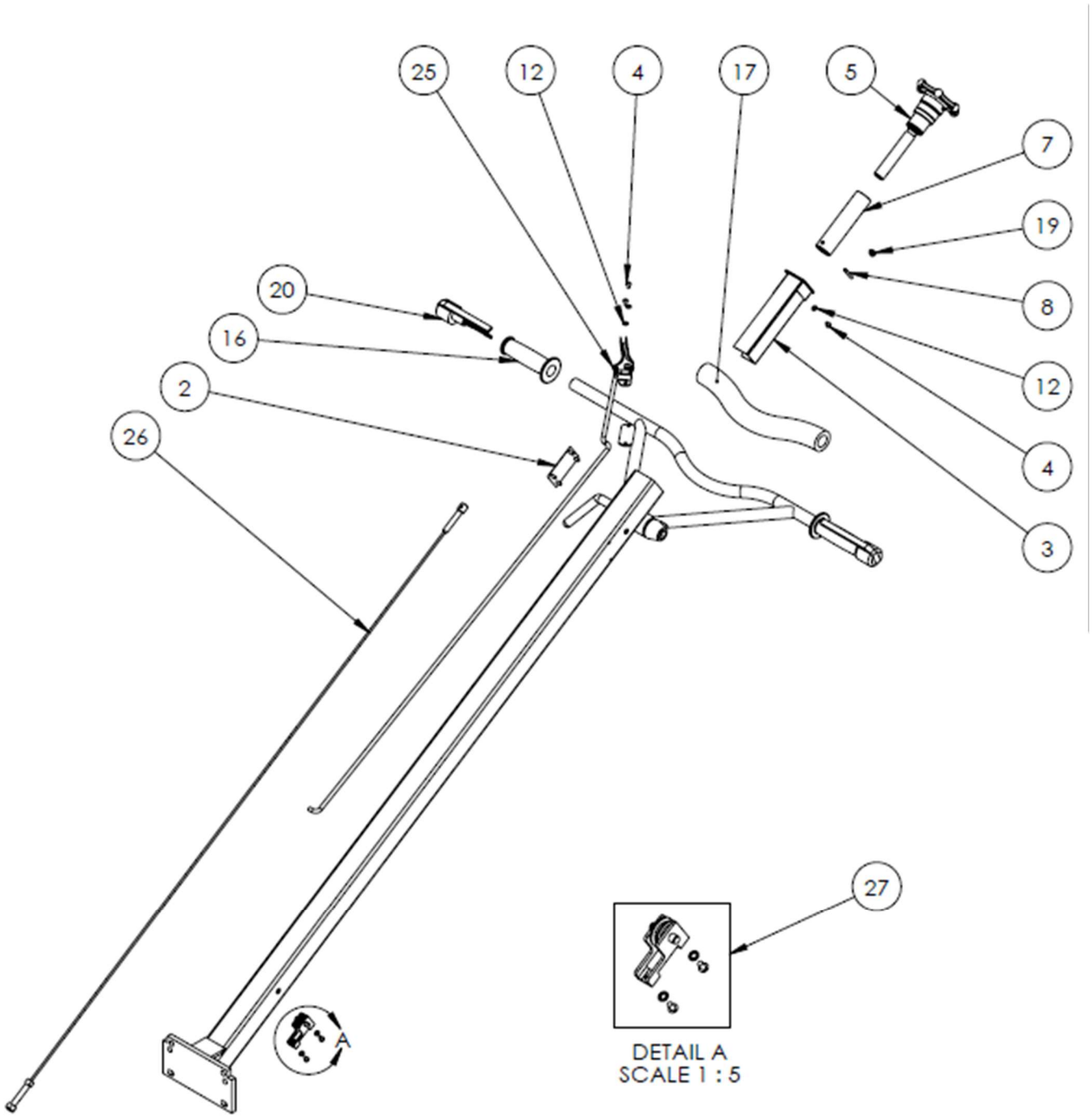

HANDLE ASSEMBLY: 20231E - PARTS LIST 9

Item #	Part #	Description	QTY	Remarks
2	20113	SIDE COVER	1	10/01/2014
3	20112	PITCH INSERT	1	10/01/2014
4	21728	RHMS, M5-0.8 X 8MM LG	5	10/01/2014
5	21714	HAND KNOB ASSEMBLY	1	10/01/2014
7	21722	THREADED SLIDE BUSHING	1	10/01/2014
8	21724	PIN 3/16"DIA X 1-1/4"LG	1	10/01/2014
12	10703	LOCK WASHER, INTERNAL TOOTH, #10	5	10/01/2014
16	21717	HANDLE GRIP	2	10/01/2014
17	21721	CROSSBAR PAD	1	10/01/2014
19	21725	M6-1.0 X 6MM LG	1	10/01/2014
20	11852	SAFETY LEVER, PIGTAIL WIRES	2	10/01/2014
25	10508	THROTTLE LEVER ASSEMBLY, W/ CABLE	1	10/01/2014
26	20332	PITCH CONTROL CABLE, 54 17/32” HOLE TO END OF LUG	1	10/01/2014
27	20288	PULLEY ASSEMBLY	1	10/01/2014
		EURO WIRE ASSEMBLY	1	10/01/2014
	10525-SQCOM	BARTELL DECAL KIT	1	

Parts list 10: Walk-behind Trowels

HANDLE ASSEMBLY DIAGRAM: 20365 PRO PITCH

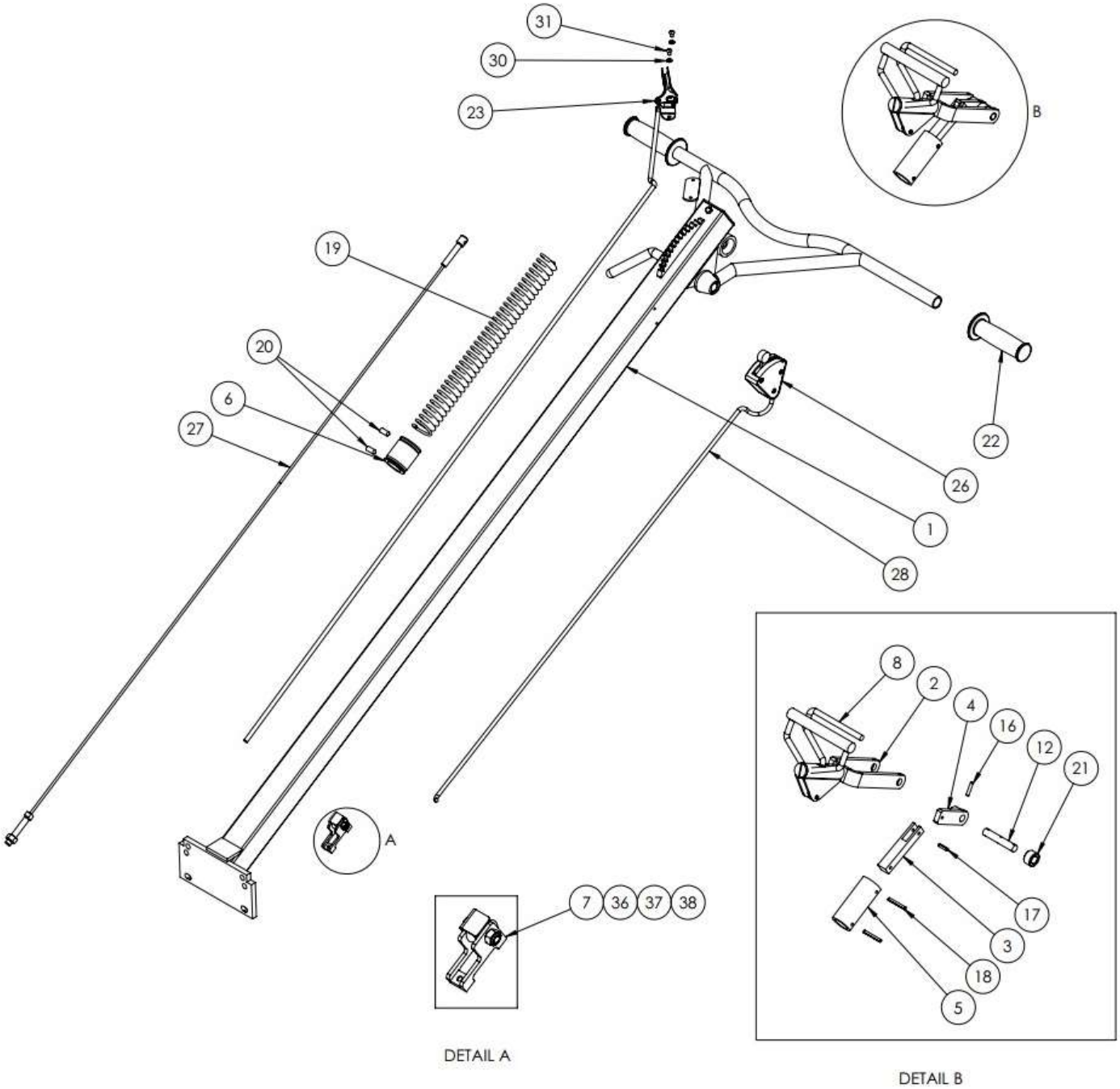

HANDLE ASSEMBLY: 20365 PRO PITCH – PARTS LIST 10

Item #	Part #	Description	QTY	Remarks
1	20365	PRO PITCH HANDLE ASSM, COMPLETE	1	
2	23250	PRO PITCH LEVER ASSM	1	
3	23256	CONNECTING ROD 1	1	
4	23255	CONNECTING ROD 2	1	
5	23257	ALUMINUM BUSHING	1	
6	23258	SPRING STOP	1	
7	20288	PULLEY ASSEMBLY	1	
8	23251	LEVER	1	
12	23254	PIVOT PIN	1	
16	21806	SPRING PIN, M5 X 24MM	3	
17	21995	SPRING PIN, M5 X 20MM	1	
18	21994	SPRING PIN, M5 X 40MM	2	
19	23262	SPRING	1	
20	11762	SHSS, M8-1.25x20MM LG. CONE PT.	2	
21	23261	SPACER, 25x14x15	2	
22	21717	HANDLE GRIP	2	
23	10508	THROTTLE LEVER	1	
26	21847	SAFETY SWITCH	1	
27	20335	PITCH CONTROL CABLE 1331MM HOLE TO END OF LUG	1	
28	20703	WIRE ASSEMBLY	1	
30	10703	LOCKWASHER, #10	2	
31	21728	PHMS, M5-0.8 X 8MM LG	2	
36	20293	CABLE GUIDE	1	
37	11617	LOCKNUT, M8-1.25	1	
38	10407M	HHCS, M8-1.25x30MM LG.	1	

PARTS LIST 11 – WALK-BEHIND TROWELS

BLADE KIT ASSEMBLY DIAGRAM

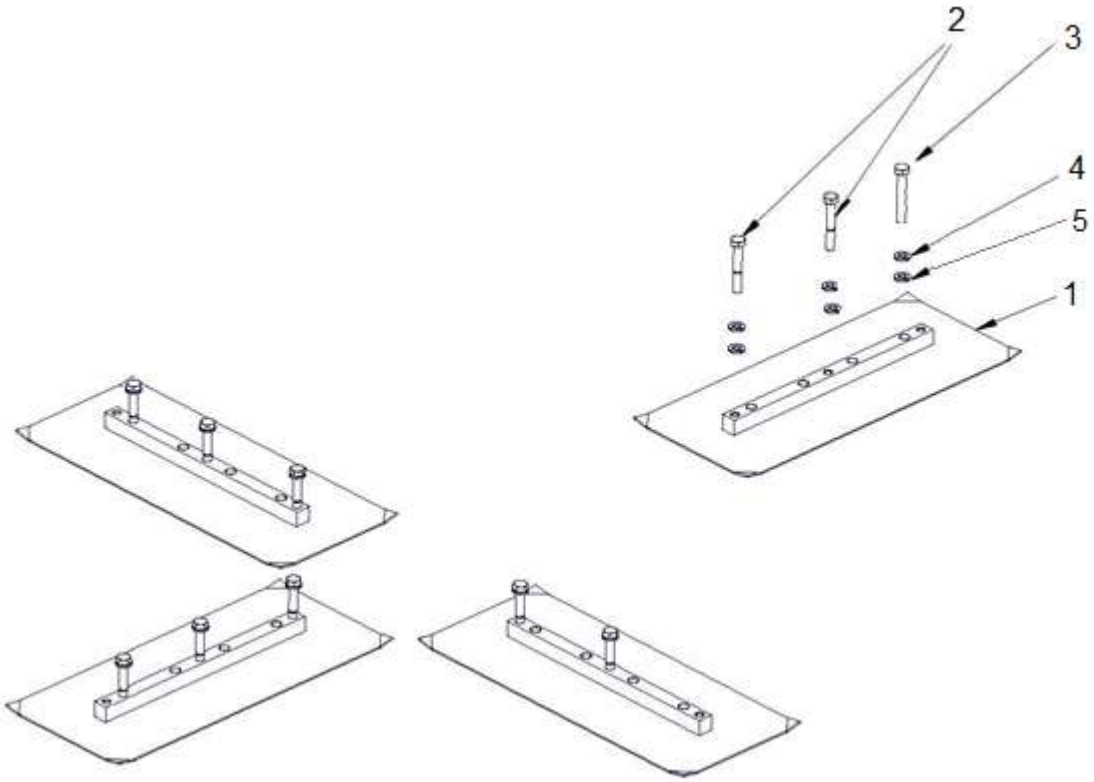

BC446 BLADES – PARTS LIST 11

Item #	Part #	Description	QTY	Remarks
1	-	TROWEL BLADE	4	10/01/2014
2	10784	HEX HD. CAP SCREW, M8-1.25 X 45MM	8	10/01/2014
3	11745	HEX HD. CAP SCREW, M8-1.25 X 55MM	4	10/01/2014
4	11614	LOCK WASHER, M8	12	10/01/2014
5	11538	2.5MM SPACER	12	10/01/2014

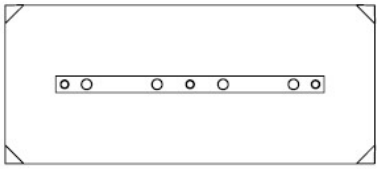

STANDARD FINISHING BLADE

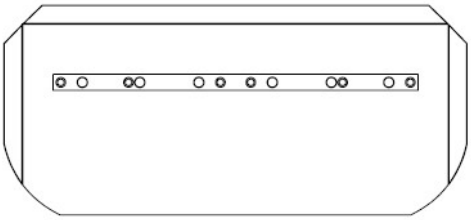

STANDARD COMBINATION BLADE

Part #	Dimensions	Part #	Dimensions
20662	6” x 18” (15.2CM x 45.7CM)	20663	8” x 18” (20.3CM x 45.7CM)

BARTELL GLOBAL

This Page Intentionally Left Blank

CONTRACTOR PROVEN EQUIPMENT SINCE 1946

BARTELL GLOBAL

170 Traders Blvd E
Mississauga, ON L4Z 1W7
Canada

4701 Allmond Avenue
Louisville, KY 40209
United States

200 Commerce Drive
Freehold, NJ 07728
United States

Honeyholes Lane
Dunholme, Lincoln LN2 3SU
United Kingdom

BartellGlobal.com