BARTELL GLOBAL | PARTS BOOK

RIDE-ON TROWEL

Titan 96

Doc. # PB-B19013
Orig. Rel. – 01/2017
Curr Rev. – 10

Intentionally Left Blank

www.BartellGlobal.com

CANADA
170 Traders Blvd E
Mississauga, Ontario L4Z 1W7
TEL (647) 953-4100 **FAX** (647) 953-4101

KENTUCKY
4701 Allmond Ave
Louisville, Kentucky 40209
TEL (425) 405-9100 **FAX** (425) 405-9101

UK
Honeyholes Lane
Dunholme, Lincoln, UK LN2 3SU
TEL 01673 860709 **FAX** 01673 861119

NEW JERSEY
200 Commerce Drive, Unit A
Freehold, New Jersey 07728
TEL (848) 225-8100 **FAX** (848) 225-8101

ORIGINAL LANGUAGE OPERATING MANUAL FOR
BARTELL RIDE-ON TROWELS

© 2023 Bartell Global Inc.
No part of this work may be reproduced or transmitted in any form or by any means, electronic or mechanical, including photocopying and recording, or by any information storage or retrieval system without the prior written permission of Bartell Morrison Inc. unless such copying is permitted by federal copyright laws.

ADDRESS INQUIRIES OR REFERENCE PERMISSIONS CARE OF:
Bartell Global, 170 Traders Blvd E., Mississauga, Ontario, Canada, L4Z 1W7

REV.	DATE	DESCRIPTION	APPROVED BY:
01	13/01/17	All drawings redone and parts lists updated	BM
02	13/02/17	Changed item 8`s part number 12893 from 12894 parts list 8	BM
03	21/02/17	Added a parts tables and retardant system	BM
04	12/06/18	Added retardant system cap item 8a to parts list 16	AN
05	08/08/18	Added Transporter parts lists 17, added pick up brackets to parts list 1	AN
06	10/02/20	Corrected P/N's	AN
07	09/03/20	Updated parts list 9 to reflect changes of support bearing (1x 12453 replaced 16105)	AN
08	11/17/21	Updated Descriptions Page 38	AN
09	05/23	Updated Clutch P/N, Added Parts for 5 blade option, Updated Seat assembly	AN
10	07/24	Corrected Descriptions	AN

TABLE OF CONTENTS

PARTS LIST 1 – RIDE-ON TROWELS 5

TITAN, FRAME COMMON: 16807 – PARTS LIST 1 6
TITAN, FRAME COMMON: 16807 – PARTS LIST 1 8

PARTS LIST 2 – RIDE-ON TROWELS 10

TITAN, SEAT FRAME: 16801 – PARTS LIST 2 10
TITAN, SEAT FRAME: 16801 – PARTS LIST 2 12
TITAN, SEAT FRAME: 16801 – PARTS LIST 2 14
TITAN, SEAT FRAME: 16801 – PARTS LIST 2 16
TITAN, SEAT FRAME: 16801 – PARTS LIST 2 18

PARTS LIST 3 – RIDE-ON TROWELS 20

TITAN, 96 PANELS: 16804 – PARTS LIST 3 20

PARTS LIST 4 – RIDE-ON TROWELS 21

TITAN, 96 RINGS: 16802 – PARTS LIST 4 22

PARTS LIST 5 – RIDE-ON TROWELS 23

POWERPLANT ASSEMBLY – PARTS LIST 5 24

PARTS LIST 6 – RIDE-ON TROWELS 25

TITAN, COMMON STEERING: 16805 LEFT HAND SIDE - PARTS LIST 6 26
TITAN, COMMON STEERING: 16805 RIGHT HAND SIDE – PARTS LIST 6 28

PARTS LIST 7 – RIDE-ON TROWELS 30

TITAN, 96 STEERING: 16806 LEFT HAND SIDE – PARTS LIST 7 30
TITAN, 96 STEERING: 16806 RIGHT HAND SIDE – PARTS LIST 7 32

PARTS LIST 8 – RIDE-ON TROWELS 33

PITCH CONTROL ASSEMBLY: 16114 PARTS LIST 8 34

PARTS LIST 9 – RIDE-ON TROWELS 35

TITAN 96, DRIVETRAIN ASSEMBLY: 16803 – PARTS LIST 9 36

PARTS LIST 10 – RIDE-ON TROWELS 37

ASSEMBLY: 16800 – PARTS LIST 10 38

PARTS LIST 11 – RIDE-ON TROWELS 39

GEARBOX ASSEMBLY: BRT96 – PARTS LIST 11 40

PARTS LIST 12 – RIDE-ON TROWELS 41

4 BLADE SPIDER PLATE ASSEMBLY (GREASE): BRT96 – PARTS LIST 12 41

PARTS LIST 13 – RIDE-ON TROWELS 42

5 BLADE SPIDER PLATE ASSEMBLY (GREASE): BRT96 – PARTS LIST 13 42

PARTS LIST 14 – RIDE-ON TROWELS 43

PRESSURE PLATE ASSEMBLY: 20626 – PARTS LIST 14 43

PARTS LIST 15 – RIDE-ON TROWELS 44

TROWEL BLADE ASSEMBLY: BRT96 (6X18 FINISH – 4 BLADES) METRIC – PARTS LIST 15 44
TROWEL BLADE ASSEMBLY: BRT96 (8X18 COMBO – 4 BLADES) – PARTS LIST 15 44

PARTS LIST 16 – RIDE-ON TROWELS 45

WEIGHT PACKAGE: 16091 (OPTION) – PARTS LIST 16 45

PARTS LIST 17 – RIDE-ON TROWELS 46

RETARDANT SPRAYER: 16099 (OPTION) – PARTS LIST 17 48

PARTS LIST 18 – RIDE-ON TROWELS 49

TRANSPORTER: 16083 (OPTION) – PARTS LIST 18 50

PARTS LIST 1 – RIDE-ON TROWELS

TITAN, FRAME COMMON: 16807

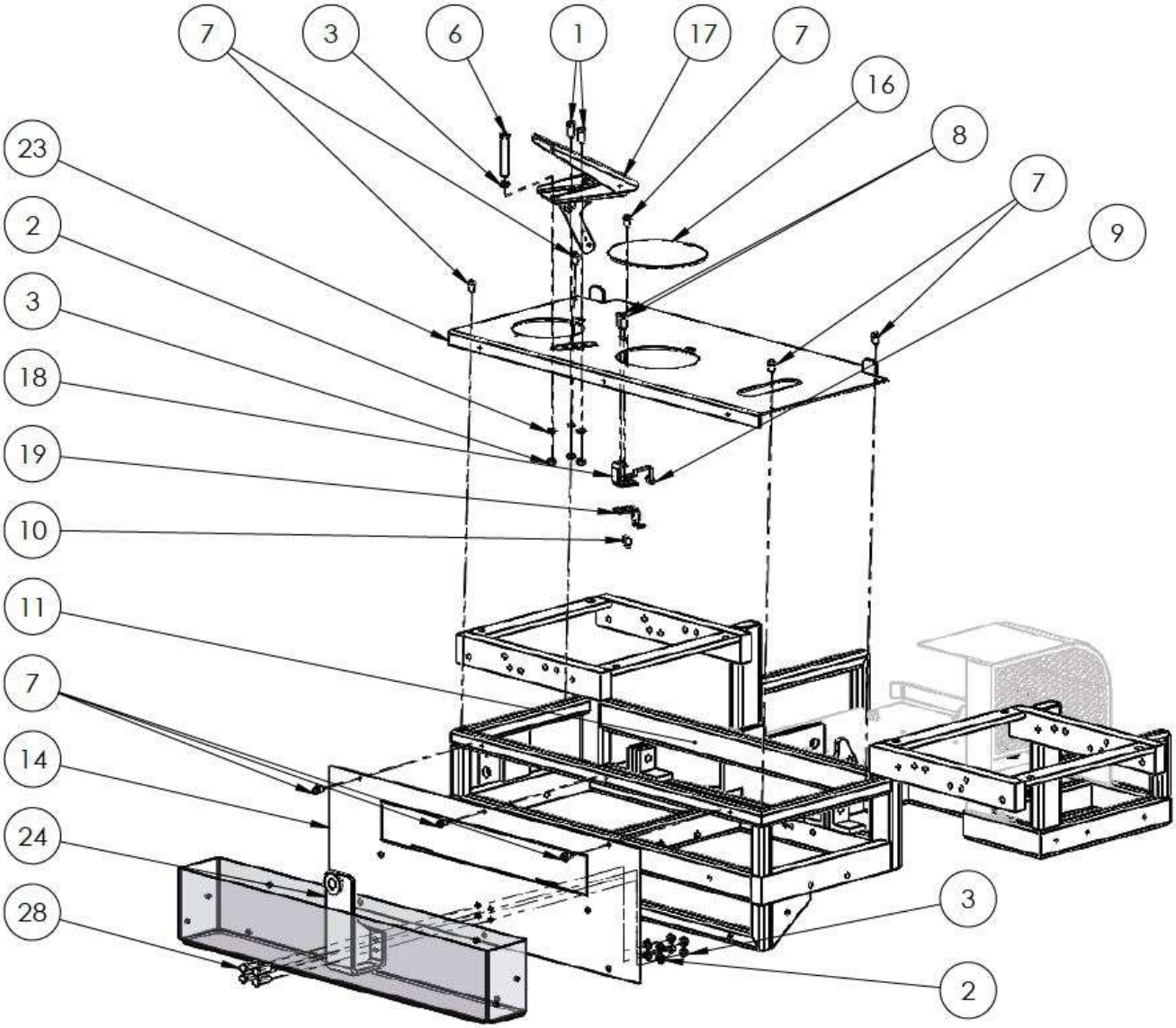

Figure 1: Lower Frame Assembly

TITAN, FRAME COMMON: 16807 – PARTS LIST 1

Item #	Part #	Description	QTY	Remarks
1	10999	HHCS M8 X 20MM	2	
2	11614	LOCK WASHER, M8, ZP	7	
3	11615	NUT, HEX, M8-1.25, ZP	8	
6	11745	HHCS, M8-1.25 X 55MM LG, ZP	1	
7	14596	HWHS 1/4-20 X 1/2"LG THREAD CUTTING	8	
8	51058	HHCS, M6-1.0 X 20MM LG, ZP	2	
9	11865	LOCKNUT, M6-1 NYLOCK	2	
10	10711	HHMS M5-0.8 X 12MM LG, ZP	2	
11	16001	TITAN UNI-CHASSIS	1	
14	16055	TITAN FRONT PANEL	1	
15	16005	CHECKERED FLOOR PLATE (ALUM)	1	
16	16069	TITAN FLOOR COVER PLATE	1	
17	16048	THROTTLE PEDAL	1	
18	16068	THROTTLE HOLD	1	
19	13863	THROTTLE CLIP	1	
24	16090	TITAN TRANSPORTER FRONT PIN	1	S/N 711200 AND HIGHER
28	10407M	HHCS, M8-1.25 X 30MM, ZP	4	S/N 711200 AND HIGHER

TITAN, FRAME COMMON: 16807

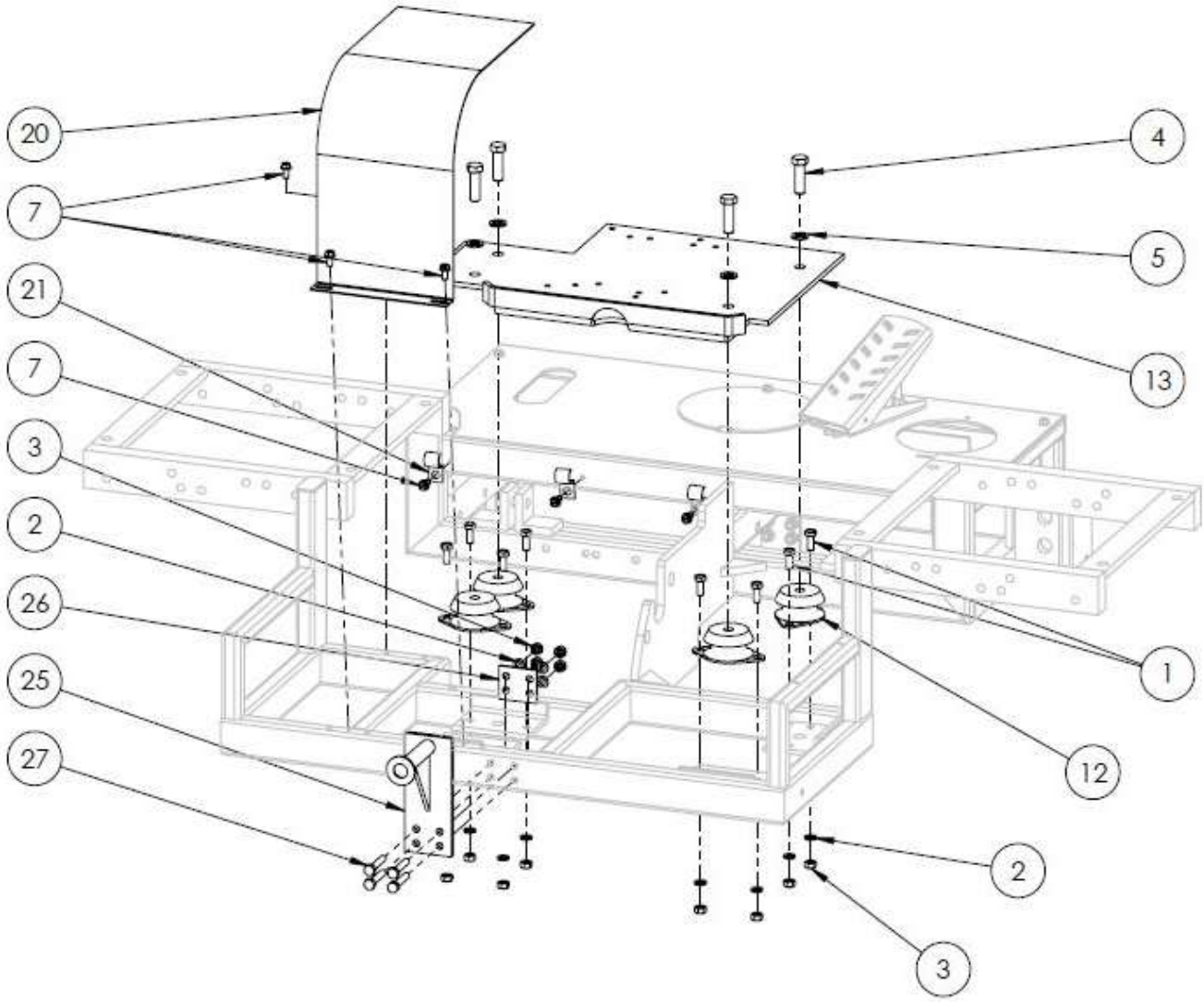

TITAN, FRAME COMMON: 16807 – PARTS LIST 1

Item #	Part #	Description	QTY	Remarks
1	10999	HHCS M8 X 20MM	8	
2	11614	LOCK WASHER, M8, ZP	12	
3	11615	NUT, HEX, M8-1.25, ZP	12	
4	10955	HHCS 12MM-1.25 X 40MM	3	
5	10735	LOCK WASHER, SPLIT, M12	3	
7	14596	HWHS ¼-20 X 1/2” LG THREAD CUTTING	6	
12	14101	ANTI-VIBRATION MOUNT	4	
13	16003	ENGINE MOUNTING PLATE	1	
20	16042	BELT GUARD TITAN	1	
21	13591	WIRING CLAMP 5/8"	3	
25	16089	TITAN TRANSPORTER BACK PIN	1	S/N 711200 AND HIGHER
26	16096	TRANSPORTER BACK PLATE	1	S/N 711200 AND HIGHER
27	10784	HHCS, M8-1.25 X 45MM, ZP	4	S/N 711200 AND HIGHER

Intentionally Left Blank

PARTS LIST 2 – RIDE-ON TROWELS

TITAN, SEAT FRAME: 16801

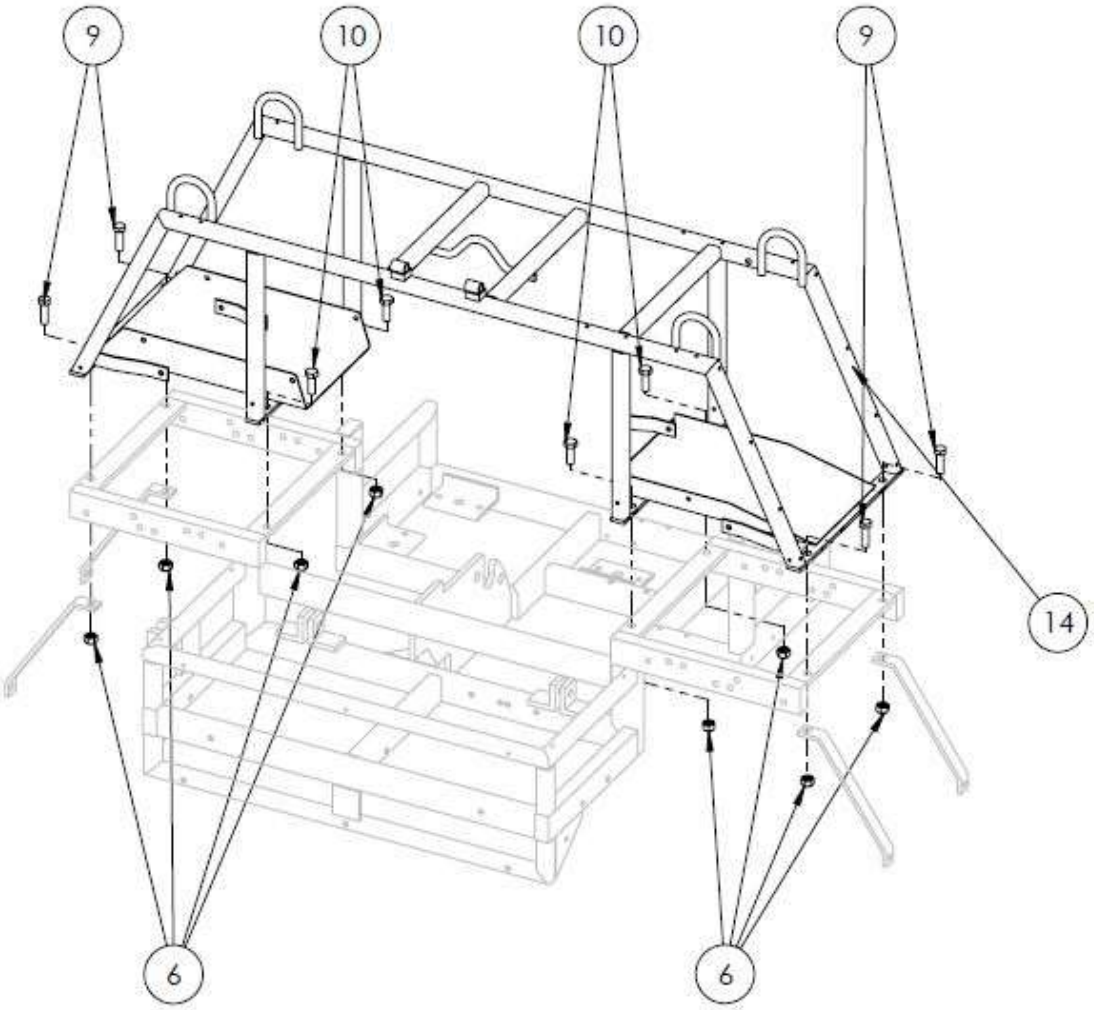

Figure 3: Seat Frame Assembly

TITAN, SEAT FRAME: 16801 – PARTS LIST 2

Item #	Part #	Description	QTY	Remarks
6	10956	M12-1.5 NYLOCK NUT	8	
9	10955	HHCS 12MM-1.25 X 40MM	4	
10	10881	M12-1.75X35, HEX CAP SCREW	4	
14	16002	SEAT FRAME UNI-CHASSIS	1	

TITAN, SEAT FRAME: 16801

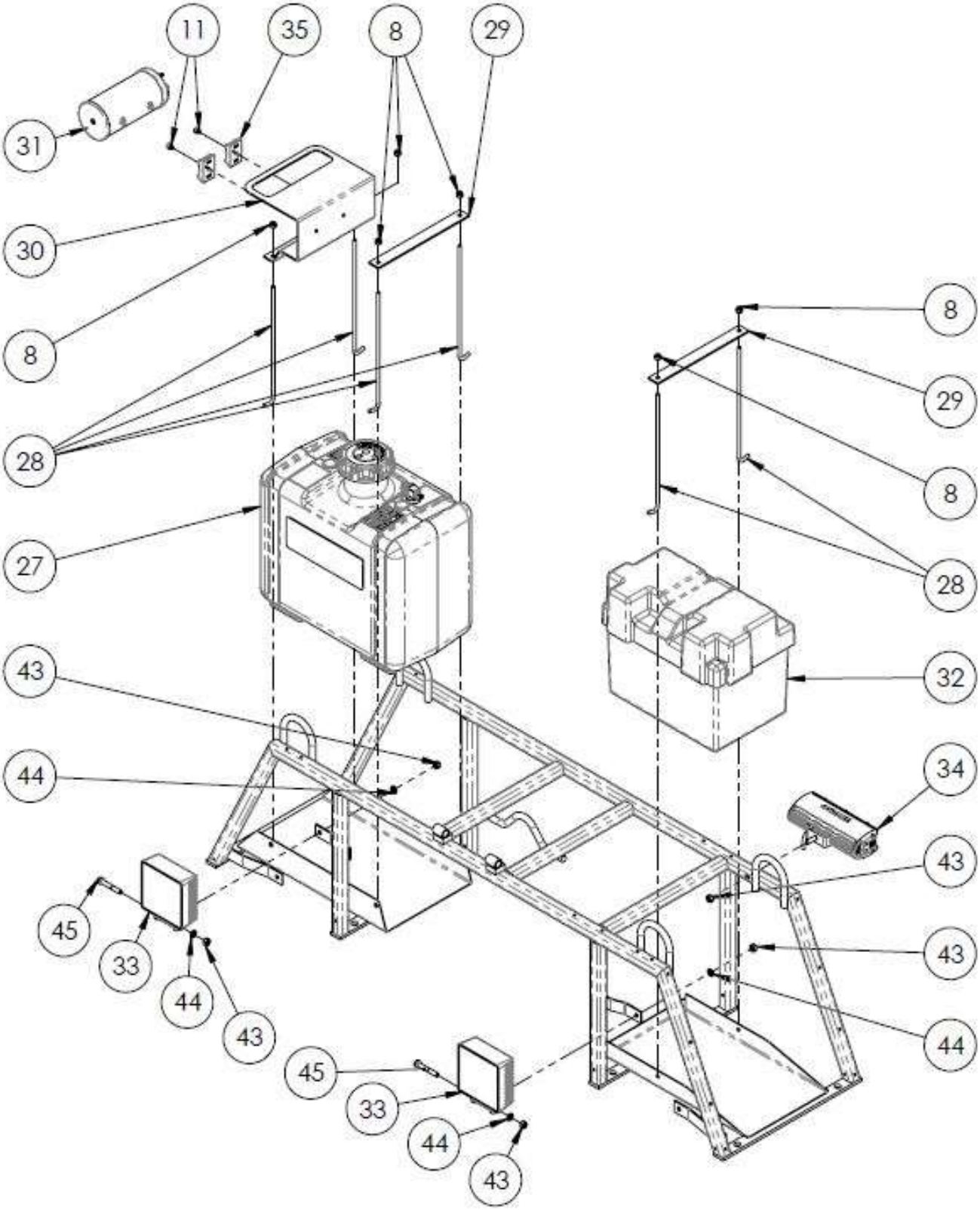

Figure 4: Seat Frame Assembly

TITAN, SEAT FRAME: 16801 – PARTS LIST 2

Item #	Part #	Description	QTY	Remarks
8	30141	LOCKNUT 1/4-20UNC	6	
11	21725	M6-1X6, SHCS, METRIC	2	
27	18150	GAS TANK	1	
28	13839	HOLD DOWN BOLT	6	
29	10192	GAS TANK HOLD-DOWN BAR	2	
30	16018	CARB COVER W/ TROWEL HOLDER	1	
31	18126	CARB CANISTER	1	
32	13192	BATTERY BOX-BLACK POLY	1	
33	16045	SQUARE LED LIGHT	2	
34	16046	RECTANGLE LED LIGHT	1	
35	18124	CARB CANISTER BRACKET	2	
43	10915	HEX NUT, 5/16-18UNC, GRADE 5	5	
44	10402	LOCKWASHER, 5/16, ZP	5	
45	10403	HHCS 5/16-18 X 2"LG	2	

Intentionally Left Blank

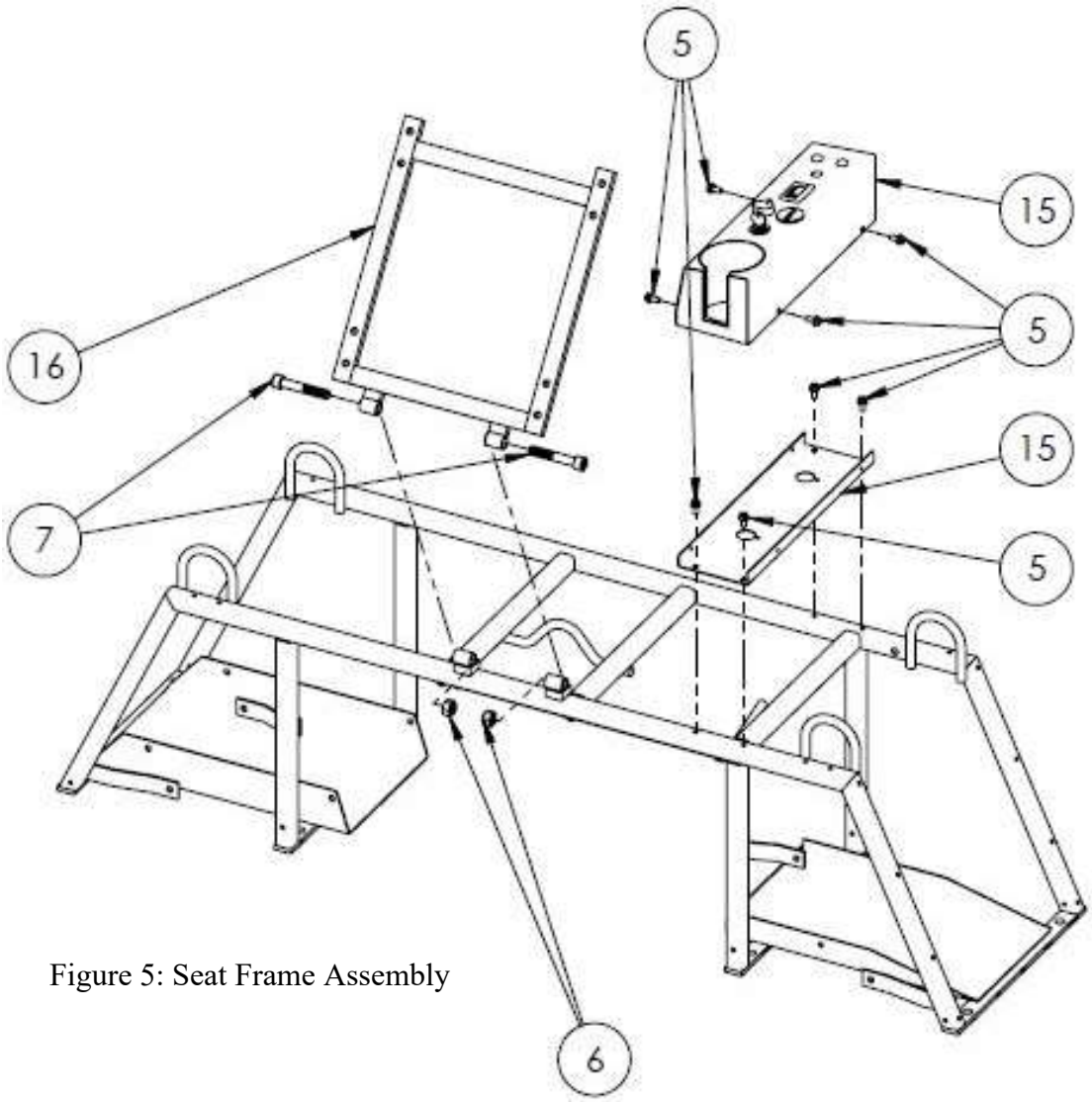

Figure 5: Seat Frame Assembly

TITAN, SEAT FRAME: 16801 – PARTS LIST 2

Item #	Part #	Description	QTY	Remarks
5	14596	HWHS 1/4-20 X 1/2"LG THREAD CUTTING	8	
6	10956	M12-1.5 NYLOCK NUT	2	
7	11863	SHCS, M10-1.75X70MM LG, ZP	2	
15	16043	TITAN CONTROL BOX	1	
16	16004	HINGED PLATE	1	

BARTELL GLOBAL

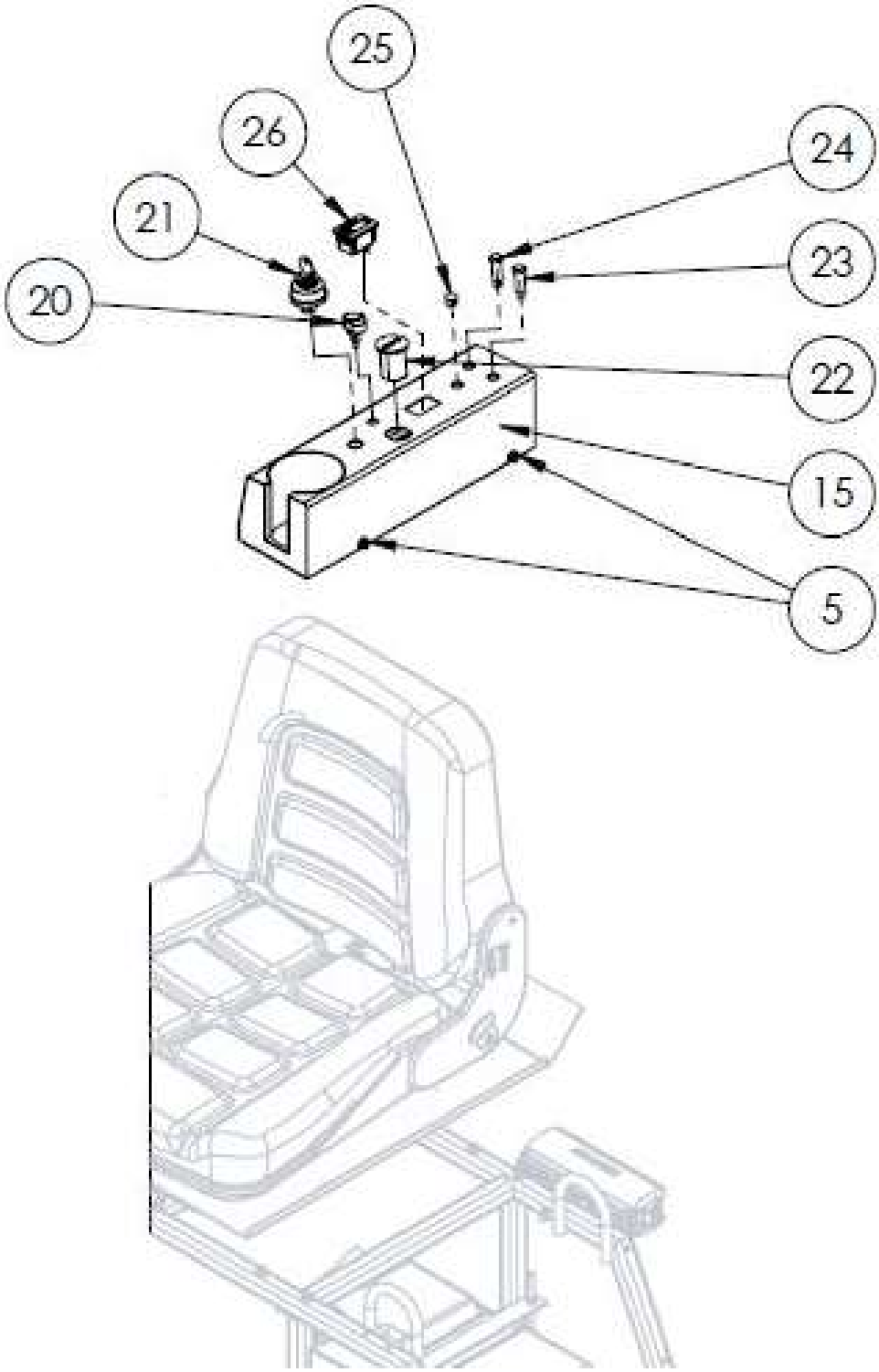

Figure 6: Seat Frame Assembly

TITAN, SEAT FRAME: 16801 – PARTS LIST 2

Item #	Part #	Description	QTY	Remarks
5	14596	HWHS 1/4-20 X 1/2"LG THREAD CUTTING	2	
15	16043	TITAN CONTROL BOX	1	
20	14377	SWITCH, ON/OFF, SPST, BLUE	1	
21	13953	IGNITION SWITCH	1	
22	16061	DUAL USB CHARGER	1	
23	14379	CONTROL LAMP, RED, 12 VDC	1	
24	14378	CONTROL LAMP, AMBER, 12 VDC	1	
25	16146	PLUG, HOLE, 1/2"	1	
26	16140	TACH/HOUR METER	1	

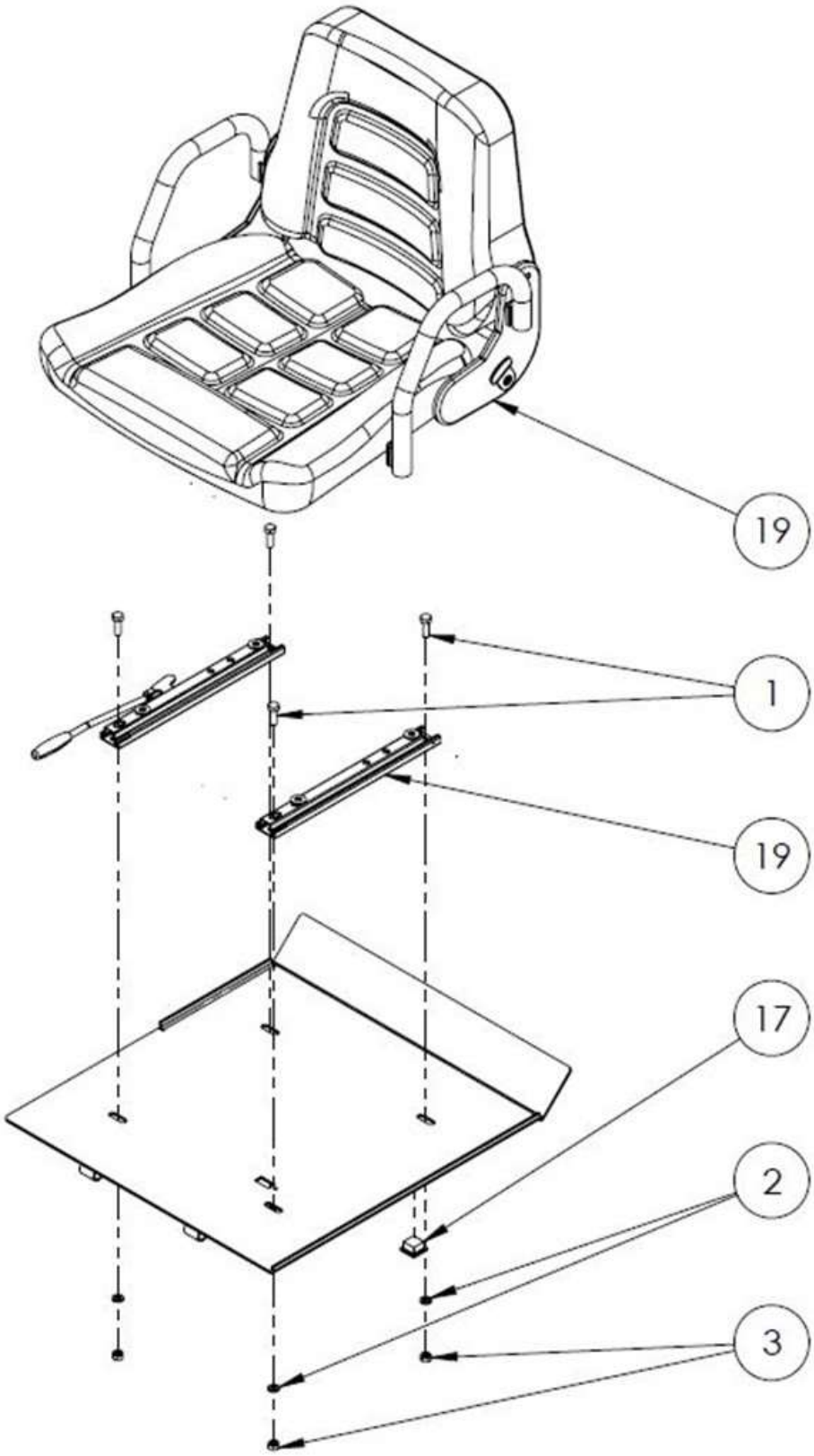

Figure 7: Seat Frame Assembly

TITAN, SEAT FRAME: 16801 – PARTS LIST 2

Item #	Part #	Description	QTY	Remarks
1	11619	HHCS, M8-1.25 X 25MM LG ZP	4	
2	11614	LOCK WASHER, M8, ZP	4	
3	11615	NUT, HEX, M8-1.25, ZP	4	
17	10573	CAP PLUG	2	
18	16142	TITAN RIDER HEAT SHIELD	1	
19	16166	OPERATOR'S SEAT, BLACK	1	
	16233	SAFETY SWITCH (OPERATOR’S SEAT)	1	

Intentionally Left Blank

PARTS LIST 3 – RIDE-ON TROWELS

TITAN, 96 PANELS: 16804

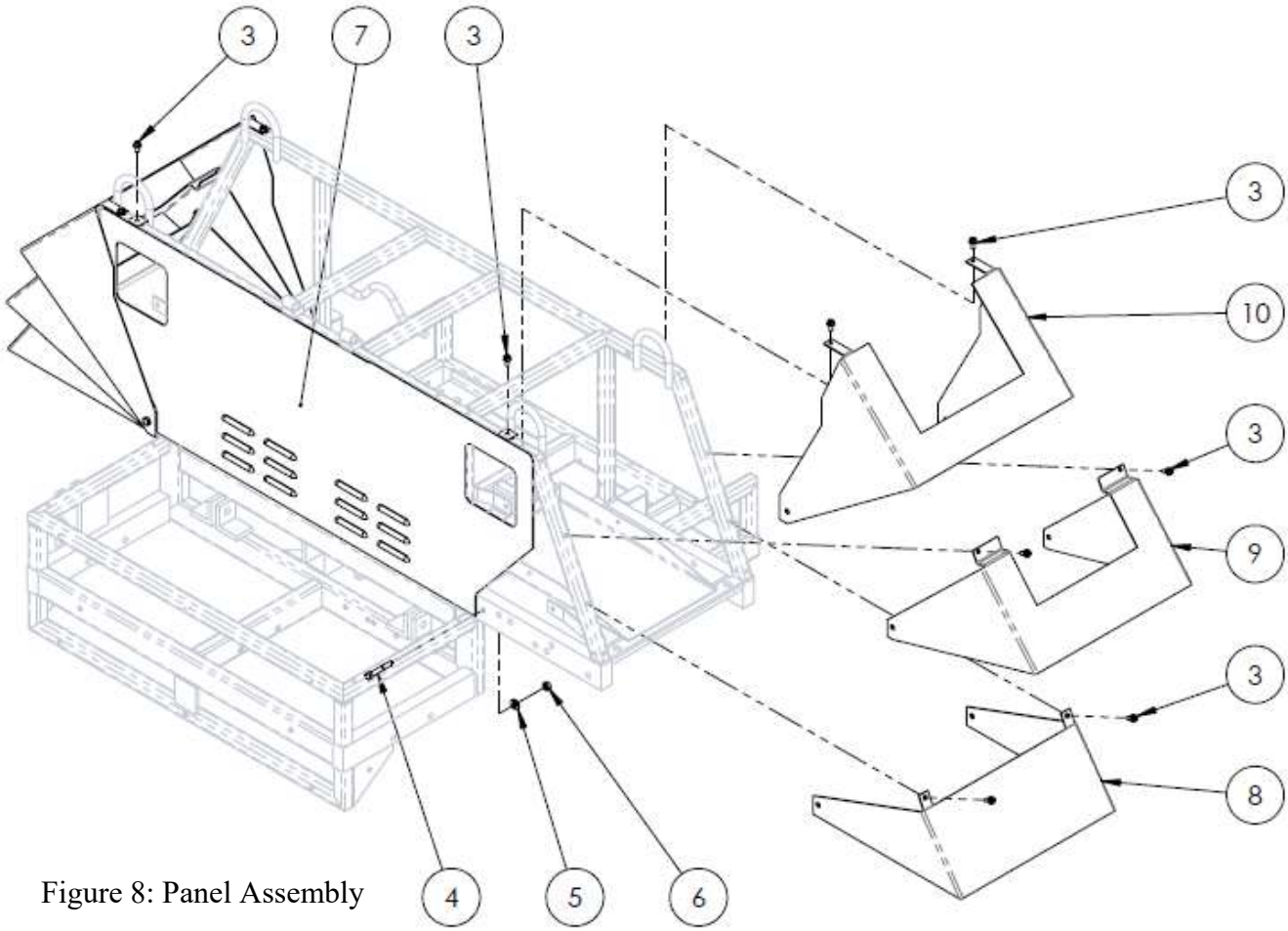

Figure 8: Panel Assembly

TITAN, 96 PANELS: 16804 – PARTS LIST 3

Item #	Part #	Description	QTY.	Remarks
3	14596	HWHS 1/4-20 X 1/2"LG THREAD CUTTING	14	
4	10453	HHCS M8-1.25 X 50MM	4	
5	11614	LOCK WASHER, M8, ZP	4	
6	11615	NUT, HEX, M8-1.25, ZP	4	
7	16059	TITAN 96 MAIN PANEL	1	
8	16056	TITAN 96 SIDE PANEL 1	2	
9	16057	TITAN 96 SIDE PANEL 2	2	
10	16058	TITAN 96 TOP SIDE PANEL	2	

PARTS LIST 4 – RIDE-ON TROWELS

TITAN, 96 RINGS: 16802

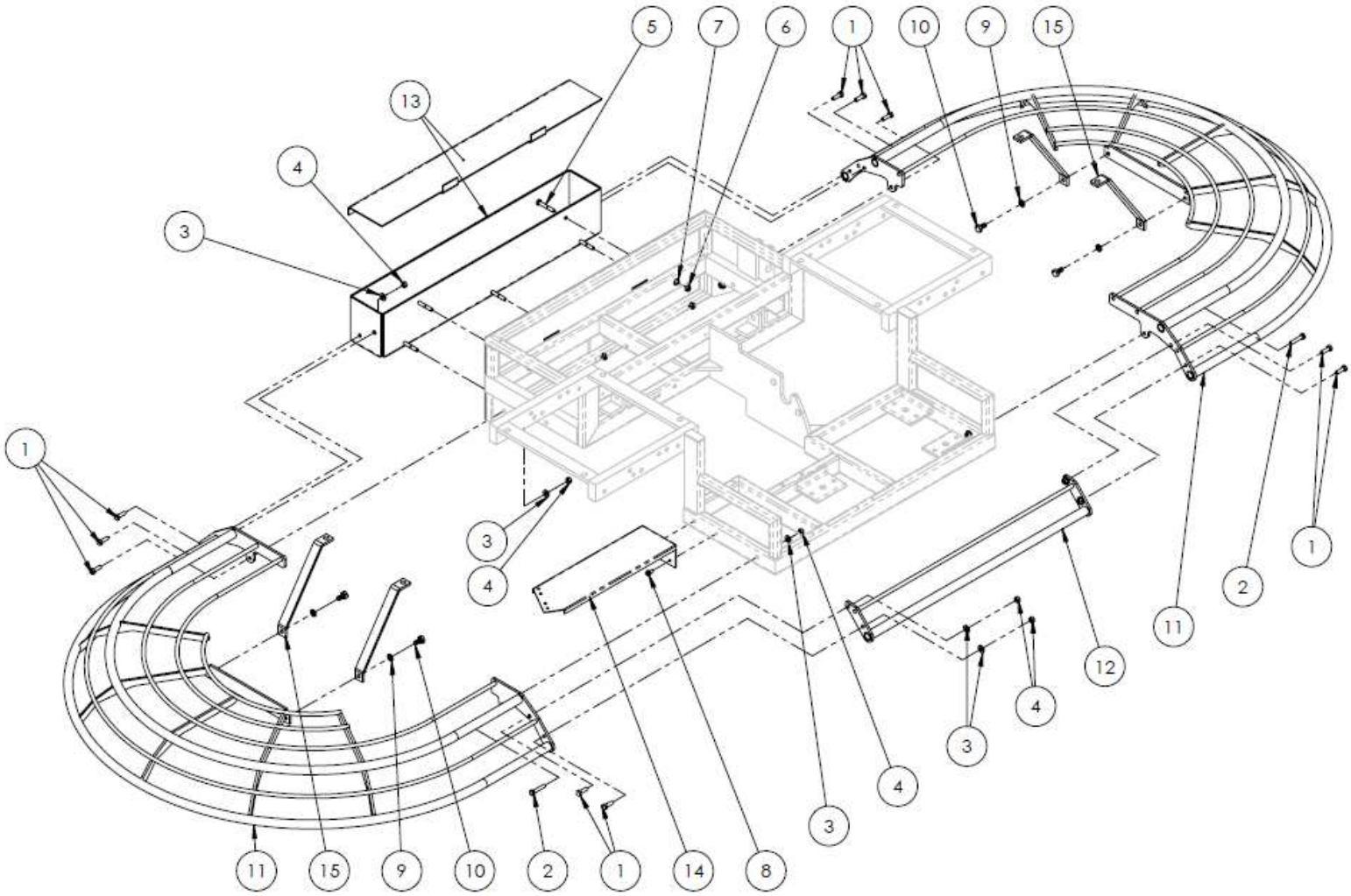

Figure 9: Guard Ring Assembly

TITAN, 96 RINGS: 16802 – PARTS LIST 4

Item #	Part #	Description	QTY.	Remarks
1	11619	HHCS, M8-1.25 X 25MM LG, ZP	10	
2	10452	HHCS M8 X 40MM	2	
3	11614	LOCK WASHER, M8, ZP	12	
4	11615	NUT, HEX, M8-1.25, ZP	12	
5	10453	HHCS M8-1.25 X 50MM	5	
6	11617	LOCK NUT, 5/16"-18UNC, NYLOCK, ZP	5	
7	11667	WASHER, FLAT, 5/16, ZP	5	
8	14596	HWHS 1/4-20 X 1/2"LG THREAD CUTTING	2	
9	11621	LOCKWASHER, M10	4	
10	31008	HHCS, M10-1.5 X 20MM LG, ZP	4	
11	16070	GUARD RING, FLIP-UP	2	
12	16073	BACK GUARD	1	
13	16019	TOOLBOX (WITH COVER)	1	
14	16131	TITAN RING COVER PLATE	1	
15	16128	TITAN GUARD RING BRACKET	4	

PARTS LIST 5 – RIDE-ON TROWELS

POWERPLANT ASSEMBLY

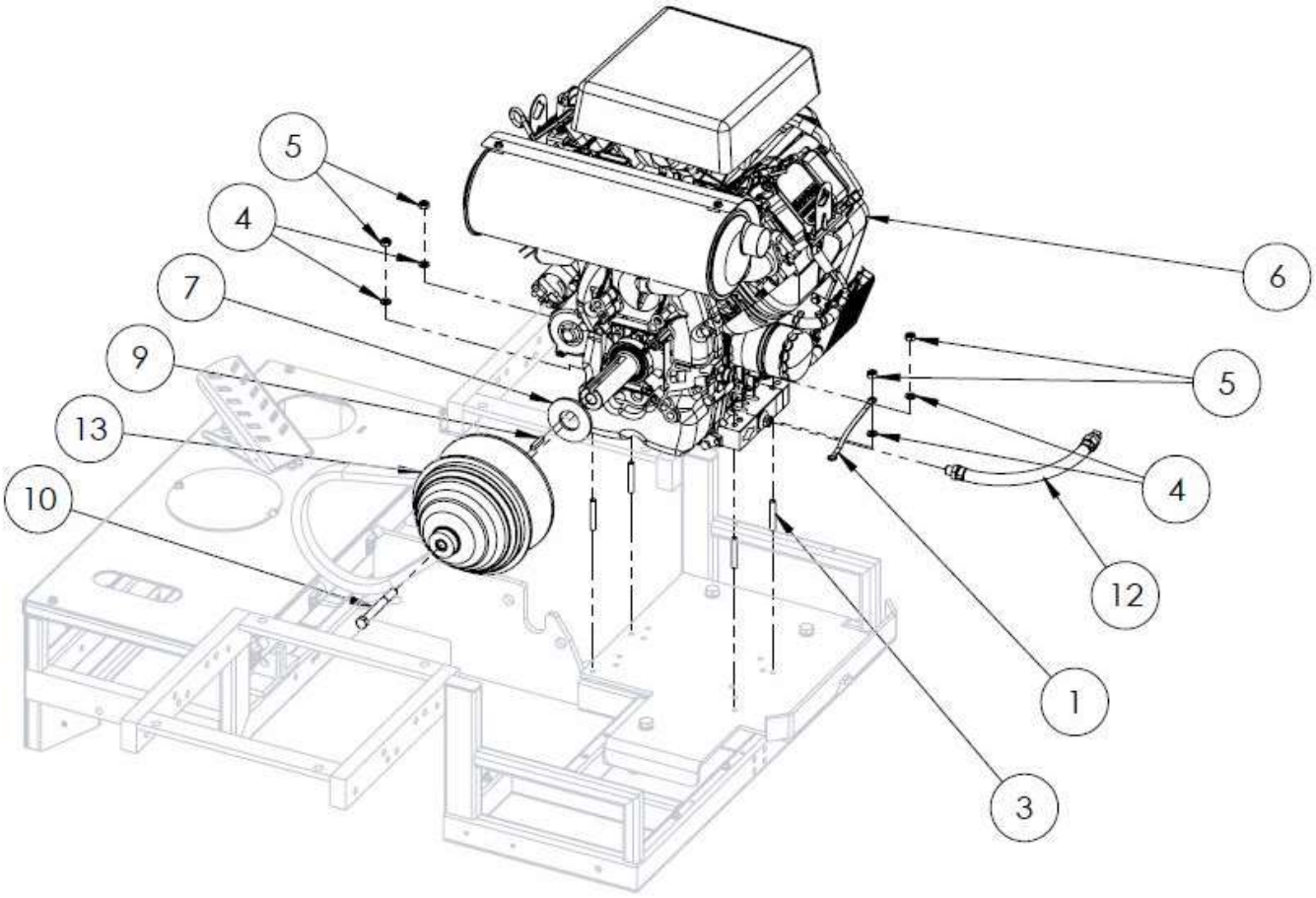

Figure 10: Power Plant Assembly

POWERPLANT ASSEMBLY – PARTS LIST 5

Item #	Part #	Description	QTY	Remarks
1	13098	GROUND STRAP	1	
3	11867	STUD, M8-1.25 X 50MM	4	
4	11614	LOCK WASHER, M8, ZP	4	
5	11615	NUT, HEX, M8-1.25, ZP	4	
6	---	ENGINE	1	
7	12708	CLUTCH SPACER, 1-1/8"	1	
8	---	WIRE HARNESS, TITAN	1	
9	10608	KEY, 1/4" SQUARE X 1-5/32" LG.	1	
10	13487	HHCS 7/16-20 X 3-1/2"LG	1	
11	13491	LOCKWASHER 7/16"DIA	1	
12	---	OIL DRAIN	1	
13	16184	CVT DRIVE CLUTCH	1	

PARTS LIST 6 – RIDE-ON TROWELS

TITAN, COMMON STEERING: 16805 LEFT HAND SIDE

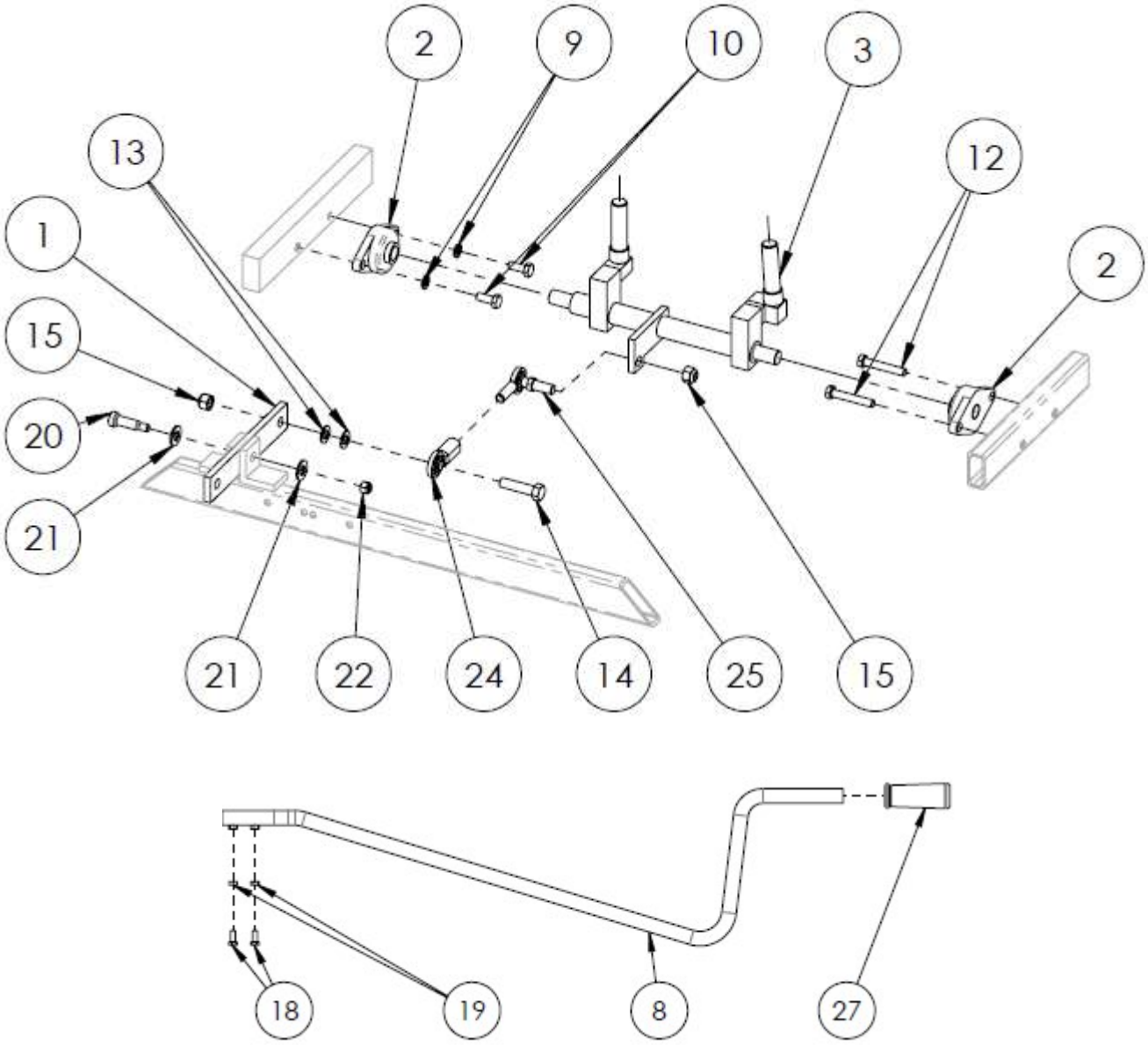

Figure 11: Left Hand Steering Assembly

TITAN, COMMON STEERING: 16805 LEFT HAND SIDE - PARTS LIST 6

Item #	Part #	Description	QTY	Remarks
1	16006	PIVOT ARM,	1	
2	13570	FLANGE BEARING	2	
3	16013	STEERING SHAFT - LH	1	
8	16049	TITAN HANDLE	2	
9	11621	LOCKWASHER, M10	2	
10	13348	HHCS, M10-1.5 X 25MM LG, ZP	2	
12	13350	HHCS, M10-1.5 X 60MM LG, ZP	2	
13	12930	WASHER, FLAT, 7/16" DIAMETER, USS, ZP	2	
14	981260	HEX BOLT, 1/2-13 UNC X 2 LG	1	
15	12517	NYLOCK NUT, 1/2-20UNF	2	
18	10999	HHCS M8 X 20MM	4	
19	11615	NUT, HEX, M8-1.25, ZP	4	
20	12985	SHSB 1/2"SHLDR X 3/8-16 X 1-1/4"LG	1	
21	50026	1/2" FLATWASHER	2	
22	10317	3/8-16UNC LOCKNUT, NYLON	1	
24	12420	ROD END PIVOT ASS'Y - FEMALE	1	
25	13932	ROD END - MALE/MALE	1	
27	13065	HANDLE GRIP 1"	4	

TITAN, COMMON STEERING: 16805 RIGHT HAND SIDE

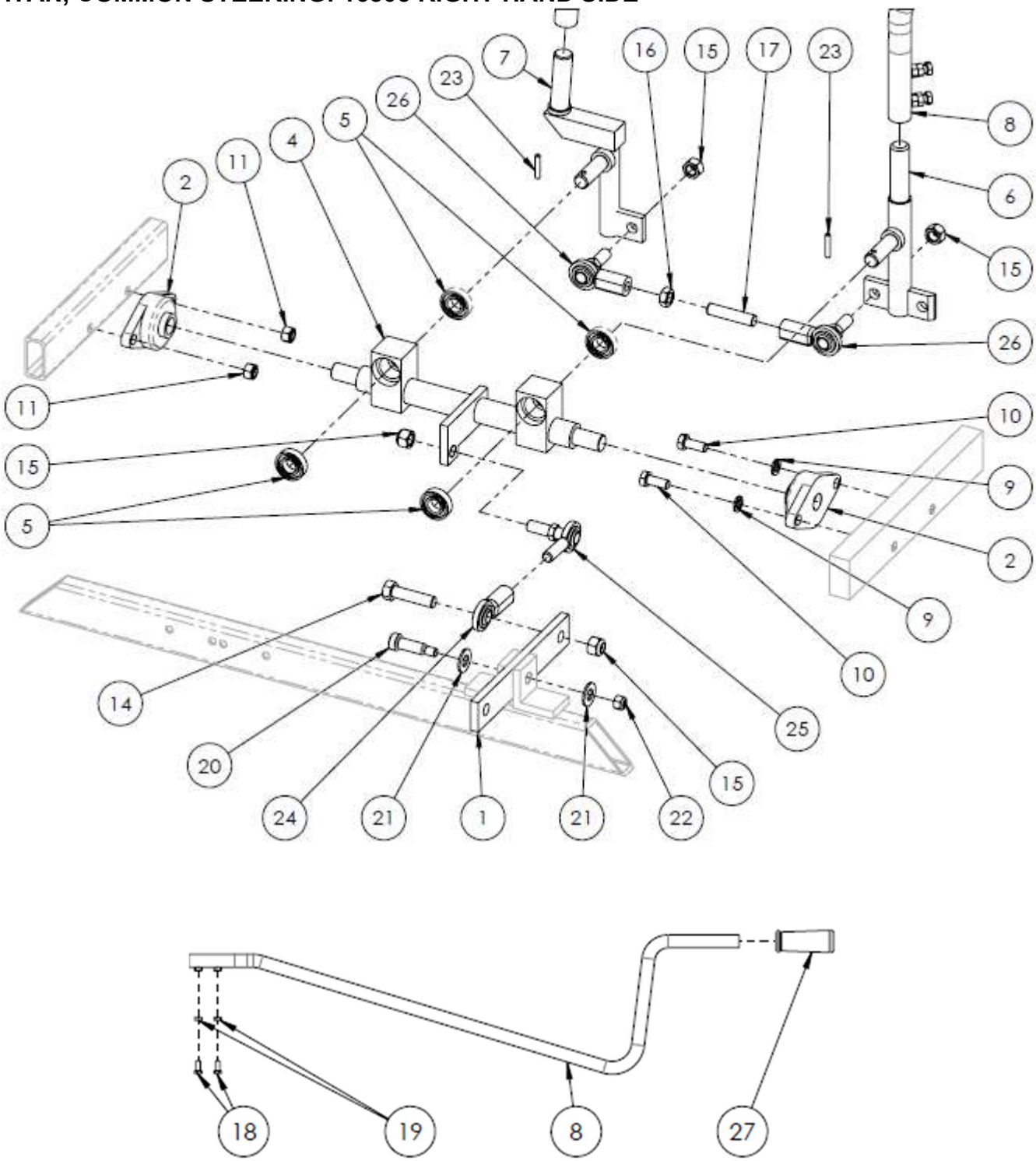

Figure 12: Right Hand Steering Assembly

TITAN, COMMON STEERING: 16805 RIGHT HAND SIDE – PARTS LIST 6

Item #	Part #	Description	QTY	Remarks
1	16006	PIVOT ARM, 3/8"	1	
2	13570	FLANGE BEARING	2	
4	16014	STEERING SHAFT, RH,	1	
5	13883	BEARING	4	
6	16010	OUTSIDE STEERING LINK-RH	1	
7	16011	INSIDE STEERING LINK-RH	1	
8	16049	TITAN HANDLE	2	
9	11621	LOCKWASHER, M10	2	
10	13348	HHCS, M10-1.5 X 25MM LG, ZP	2	
11	11802	LOCK NUT, M10-1.5, NYLOCK, ZP	2	
14	981260	HEX BOLT, 1/2-13 UNC X 2	1	
15	12517	NYLOCK NUT, 1/2-20UNF	2	
16	12592	HEX JAM NUT 1/2-20UNF	1	
17	12969	THREADED ROD 1/2-20 X 2-1/4"LG	1	
18	10999	HHCS M8 X 20MM	8	
19	11615	NUT, HEX, M8-1.25, ZP	8	
20	12985	SHSB 1/2"SHLDR X 3/8-16 X 1-1/4"LG	1	
21	50026	1/2" FLATWASHER	2	
22	10317	3/8-16UNC LOCKNUT, NYLON	1	
23	10696	SPRING PIN, 5MM X 30	2	
24	12420	ROD END PIVOT ASS'Y - FEMALE	1	
25	13932	ROD END - MALE/MALE	1	
26	12412	ROD END PIVOT ASS'Y - FEMALE/MALE	2	
27	13065	HANDLE GRIP 1"	4	

Intentionally Left Blank

PARTS LIST 7 – RIDE-ON TROWELS

TITAN, 96 STEERING: 16806 LEFT HAND SIDE

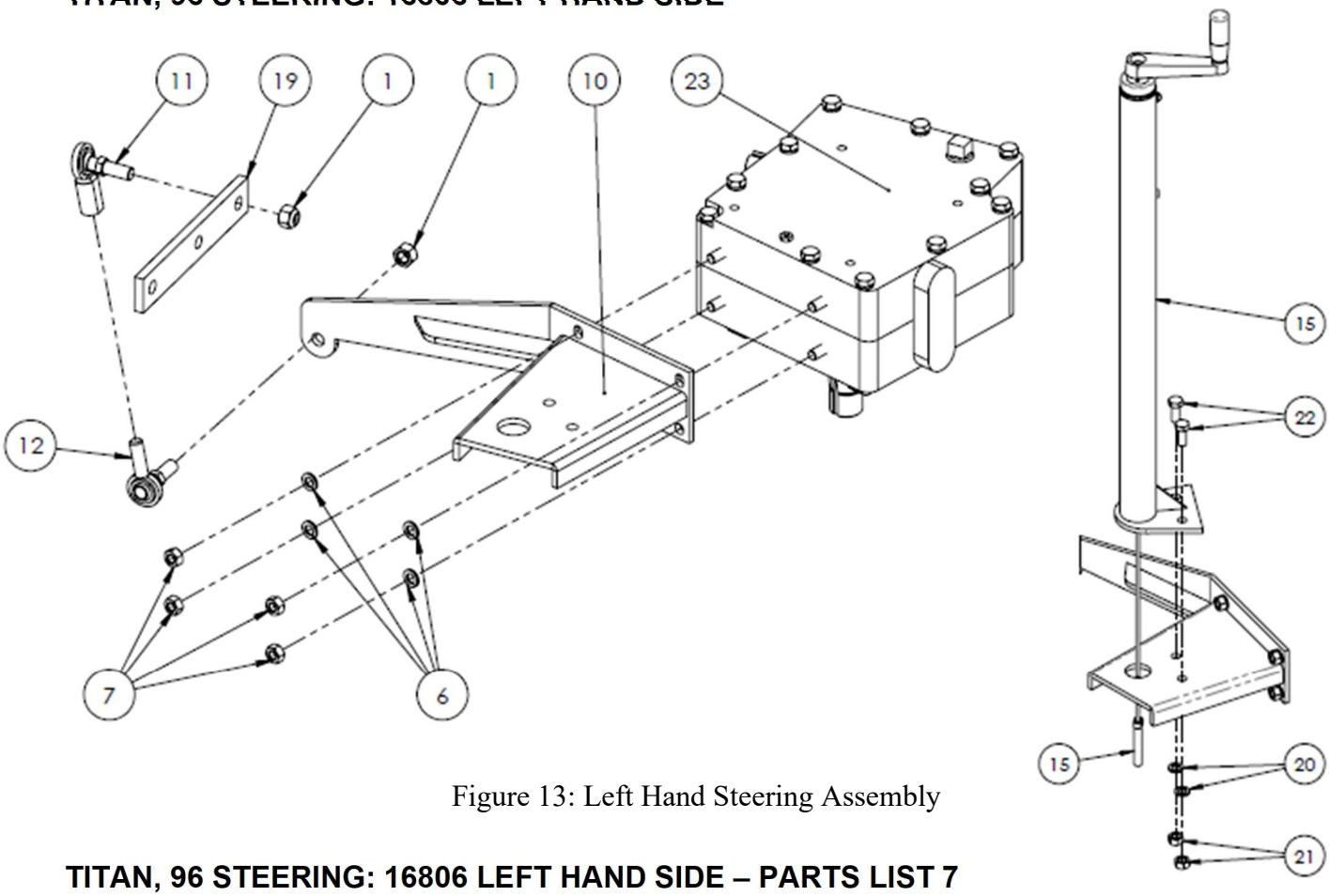

Figure 13: Left Hand Steering Assembly

TITAN, 96 STEERING: 16806 LEFT HAND SIDE – PARTS LIST 7

Item #	Part #	Description	QTY	Remarks
1	12517	NYLOCK NUT, 1/2-20 UNF	2	
6	11621	LOCKWASHER, M10	4	
7	11622	HEX NUT, M10-1.5	4	
10	16036	CONTROL ARM, REINFORCED, LH	1	
11	12412	ROD END PIVOT ASS'Y - FEMALE/MALE	1	
12	13932	ROD END - MALE/MALE	1	
15	16114	PITCH CONTROL HANDLE ASSEMBLY	1	
19	16006	PIVOT ARM	1	
20	11621	LOCKWASHER, M10, SPLIT	2	
21	11622	HEX NUT, M10-1.5, DIN 934	2	
22	13348	HHCS, M10-1.5 x 25MM LG	2	
23	16021	LH GEARBOX ASSEMBLY	1	

TITAN, 96 STEERING: 16806 RIGHT HAND SIDE

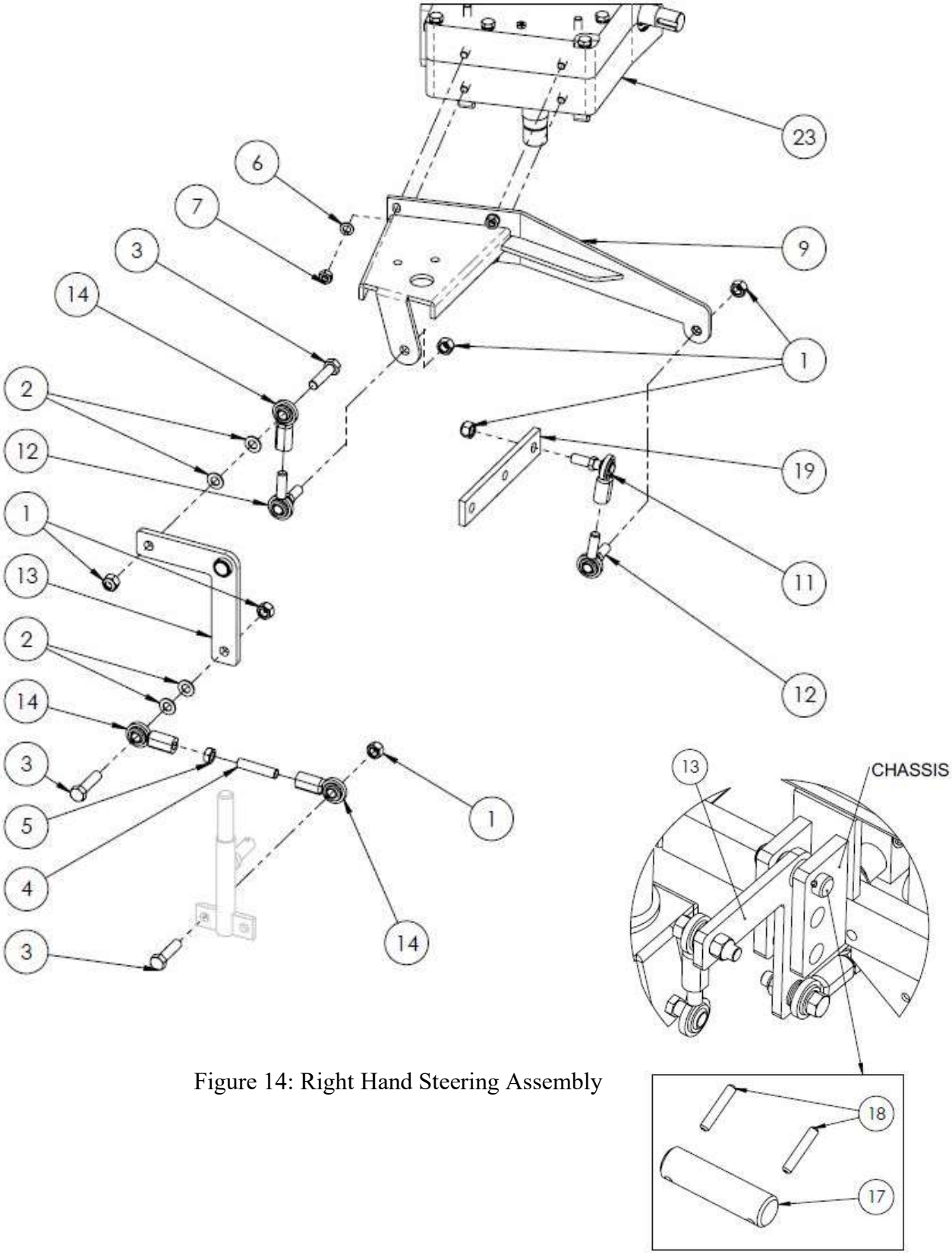

Figure 14: Right Hand Steering Assembly

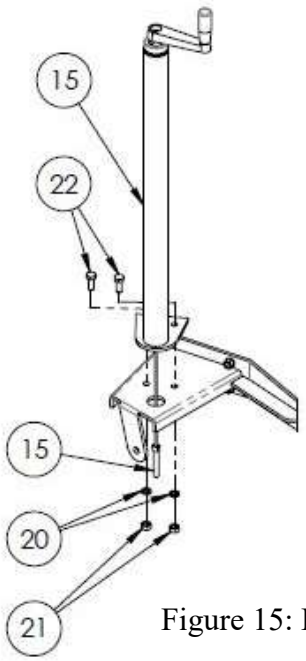

Figure 15: Right Hand Steering Assembly

TITAN, 96 STEERING: 16806 RIGHT HAND SIDE – PARTS LIST 7

Item #	Part #	Description	QTY	Remarks
1	12517	NYLOCK NUT, 1/2-20UNF	6	
2	12930	WASHER, FLAT, 7/16" DIAMETER, USS, ZP	4	
3	981260	HEX BOLT, 1/2-13 UNC x 2 LG	3	
4	12969	THREADED ROD 1/2-20 x 2-1/4"LG	1	
5	12592	HEX JAM NUT 1/2-20UNF	1	
6	11621	LOCKWASHER, M10	4	
7	11622	HEX NUT, M10-1.5	4	
9	16035	CONTROL ARM, REINFORCED, RH	1	
11	12412	ROD END PIVOT ASS'Y - FEMALE/MALE	1	
12	13932	ROD END - MALE/MALE	2	
13	16034	STEERING PIVOT, R/L	1	
14	12420	ROD END PIVOT ASS'Y - FEMALE	3	
15	16114	PITCH CONTROL HANDLE ASSEMBLY	1	
16	16123	LEVER PIN	1	
17	10696	SPRING PIN, 5MM x 30	2	
19	16006	PIVOT ARM, 3/8"	1	
20	11621	LOCKWASHER, M10, SPLIT	2	
21	11622	HEX NUT, M10-1.5, DIN 934	2	
22	13348	HHCS, M10-1.5 x 25MM LG	2	
23	16010	OUTSIDE STEERING LINK-RH	1	

PARTS LIST 8 – RIDE-ON TROWELS

PITCH CONTROL: 16114 ASSEMBLY DRAWING

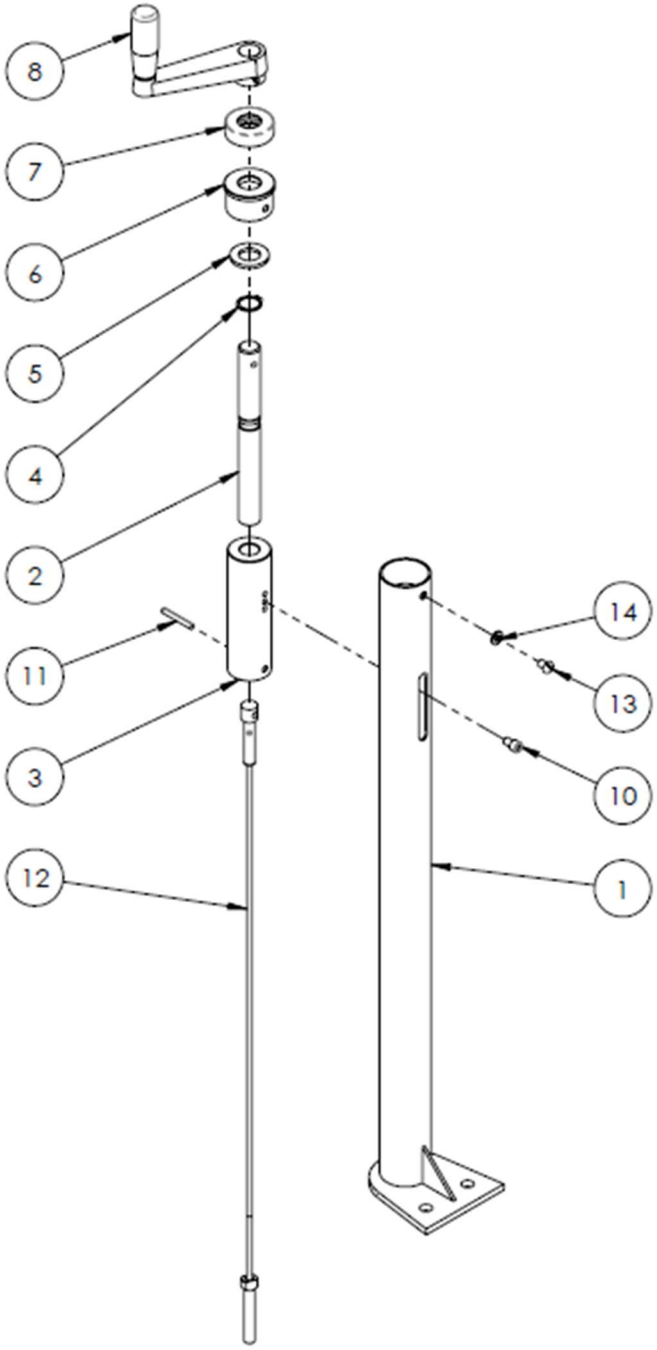

Figure 16: Pitch Control Assembly

PITCH CONTROL ASSEMBLY: 16114 PARTS LIST 8

Item #	Part #	Description	QTY	Remarks
1	14333	PITCH CONTROL TUBE	1	
2	10303	SCREW SHAFT	1	
3	10308	THREADED SLIDE BUSHING	1	
4	10307	RETAINER	1	
5	10306	WASHER 3/4"DIA	1	
6	10305	SCREW SHAFT	1	
7	10304	BEARING	1	
8	12893	CRANK HANDLE ASS'M	1	
10	10510	SHCS, 1/4"-20UNC x 3/8" LG	1	
11	10309	SPRING PIN 3/16"DIA x 1-1/2"LG	1	
12	22539	PITCH CONTROL CABLE	1	
13	10511	RHMS 1/4-20 x 3/8"LG SLOTTED	1	
14	10521	LOCKWASHER, 1/4", MEDIUM SPLIT	1	

PARTS LIST 9 – RIDE-ON TROWELS

TITAN 96, DRIVETRAIN ASSEMBLY: 16803

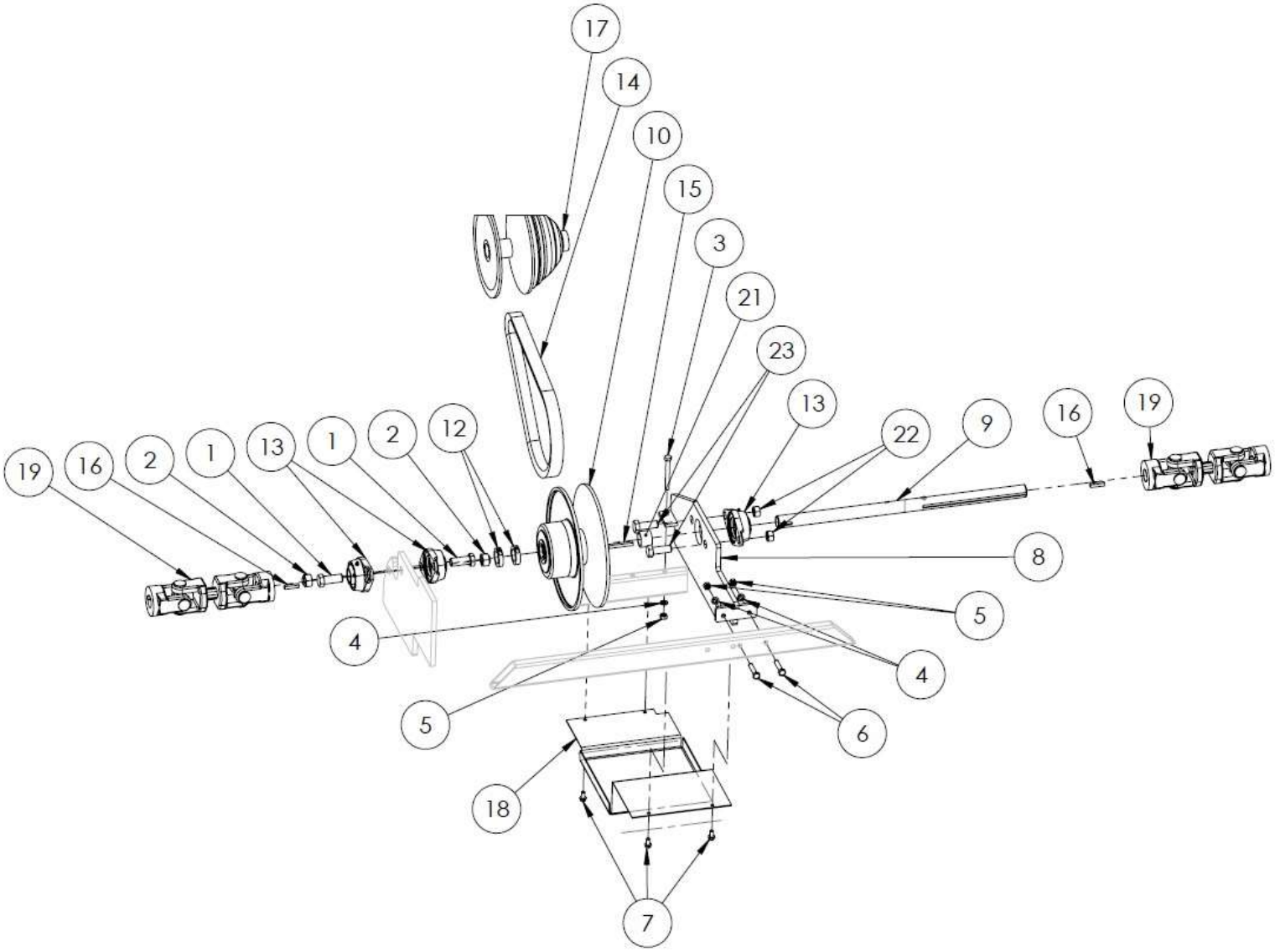

Figure 17: Drivetrain Assembly

TITAN 96, DRIVETRAIN ASSEMBLY: 16803 – PARTS LIST 9

Item #	Part #	Description	QTY	Remarks
1	16148	HHCS, M16-1.5 X 40MM LG	2	
2	16147	LOCK NUT, M16-1.5, ZP	2	
3	11745	HHCS, M8-1.25 X 55MM LG, ZP	1	
4	11614	LOCK WASHER, M8, ZP	3	
5	11615	NUT, HEX, M8-1.25, ZP	3	
6	10452	HHCS M8 X 40MM	2	
7	14596	HWHS 1/4-20 X 1/2"LG THREAD CUTTING	4	
8	16106	TITAN BEARING SUPPORT	1	
9	16065	TITAN 96 SHAFT	1	
10	16185	DRIVEN PULLEY	1	
11	16105	BEARING	1	
12	16111	SHAFT COLLAR	2	
13	12453	FLANGE BEARING	3	QTY 3 FOR S/N: 717219 AND UP
14	14879	CVT DRIVE BELT	1	
15	11003	KEY 1/4" SQ X 2"LG	1	
16	16149	KEY 1/4" SQ X 5/8"LG	2	
17	16184	CVT DRIVE CLUTCH	1	
18	16125	CVT SPLASH GUARD LARGE	1	
19	13767	U-JOINT DRIVE COUPLING	2	
21	16178	CLUTCH SPACER	1	S/N: 717219 AND UP
22	16085	LOCKNUT, M14-2	2	S/N: 717219 AND UP
23	16084	HHCS, M14-2x40MM	2	S/N: 717219 AND UP
	16105	PRESS IN BEARING	1	S/N: 717219 AND DOWN

PARTS LIST 10 – RIDE-ON TROWELS

Drivetrain Assembly: 16800

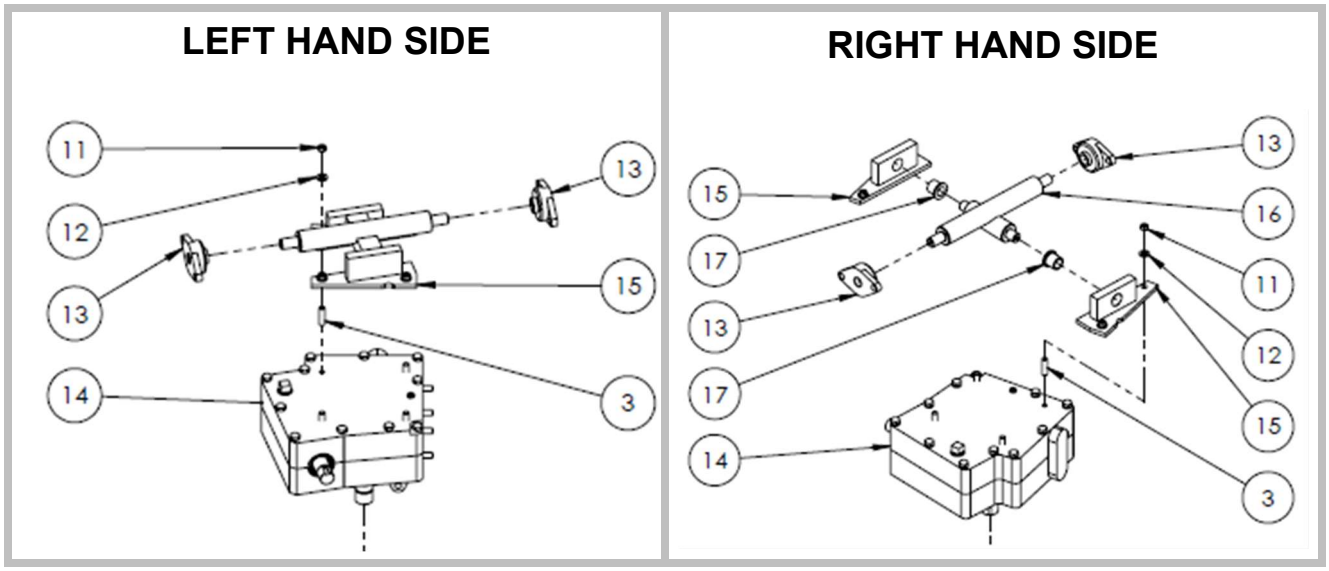

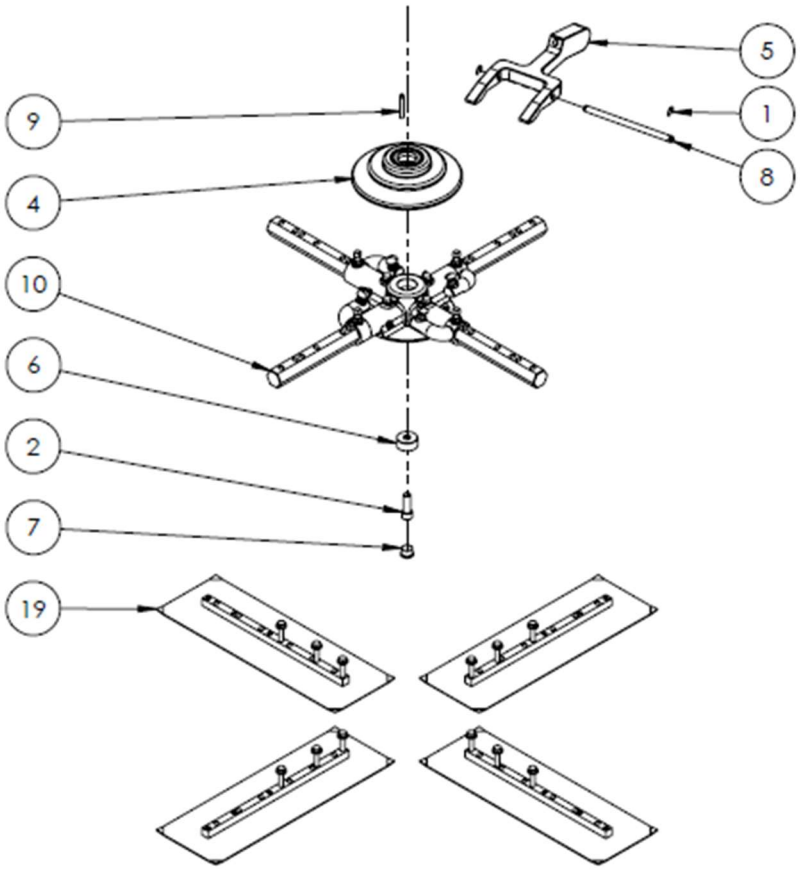

Figure 18: Drivetrain Assembly

ASSEMBLY: 16800 – PARTS LIST 10

Item #	Part #	Description	QTY	Remarks
1	10913	RETAINING RING 7/16"DIA SHAFT	2	
2	10802	SHCS 1/2"-13, 1.5" LG	1	
3	11389	M10X1.5X37MM STUD	8	
4	20626	PRESSURE PLATE ASSEMBLY LG	1	
5	10311	YOKE ARM LARGE	1	
6	10804	SPIDER PLATE RETAINING WASHER (LARGE)	1	
7	10823	CAP PLUG	1	
8	10914	YOKE ARM PIN	1	
9	22800	SPIDER ROUND-END KEY	1	
10	16017 16016 16151 16150	4-BLADE SPIDER PLATE ASSEMBLY (CCW) 4-BLADE SPIDER PLATE ASSEMBLY (CW) 5-BLADE SPIDER PLATE ASSEMBLY (CCW) 5-BLADE SPIDER PLATE ASSEMBLY (CW)	1 1 1 1	
11	11622	NUT, HEX, M10-1.25, ZP	4	
12	11621	LOCK WASHER, M10, ZP	4	
13	13570	FLANGE BEARING	2	
14	16021 16020	LH TITAN GEARBOX ASS'M RH TITAN GEARBOX ASS'M	1 1	
15	16009 16007	LH GEARBOX MOUNTING BRACKET RH GEARBOX MOUNTING BRACKET	1 2	
16	16008	RIGHT MOUNTING BRKT ASSY	1	
17	12593	FLANGED BUSHING	2	
19	20662 20663	BLADE KIT, FINISH BLADE KIT, COMBO	1	

PARTS LIST 11 – RIDE-ON TROWELS

GEARBOX ASSEMBLY: 16020 and 16021
16021 Shown

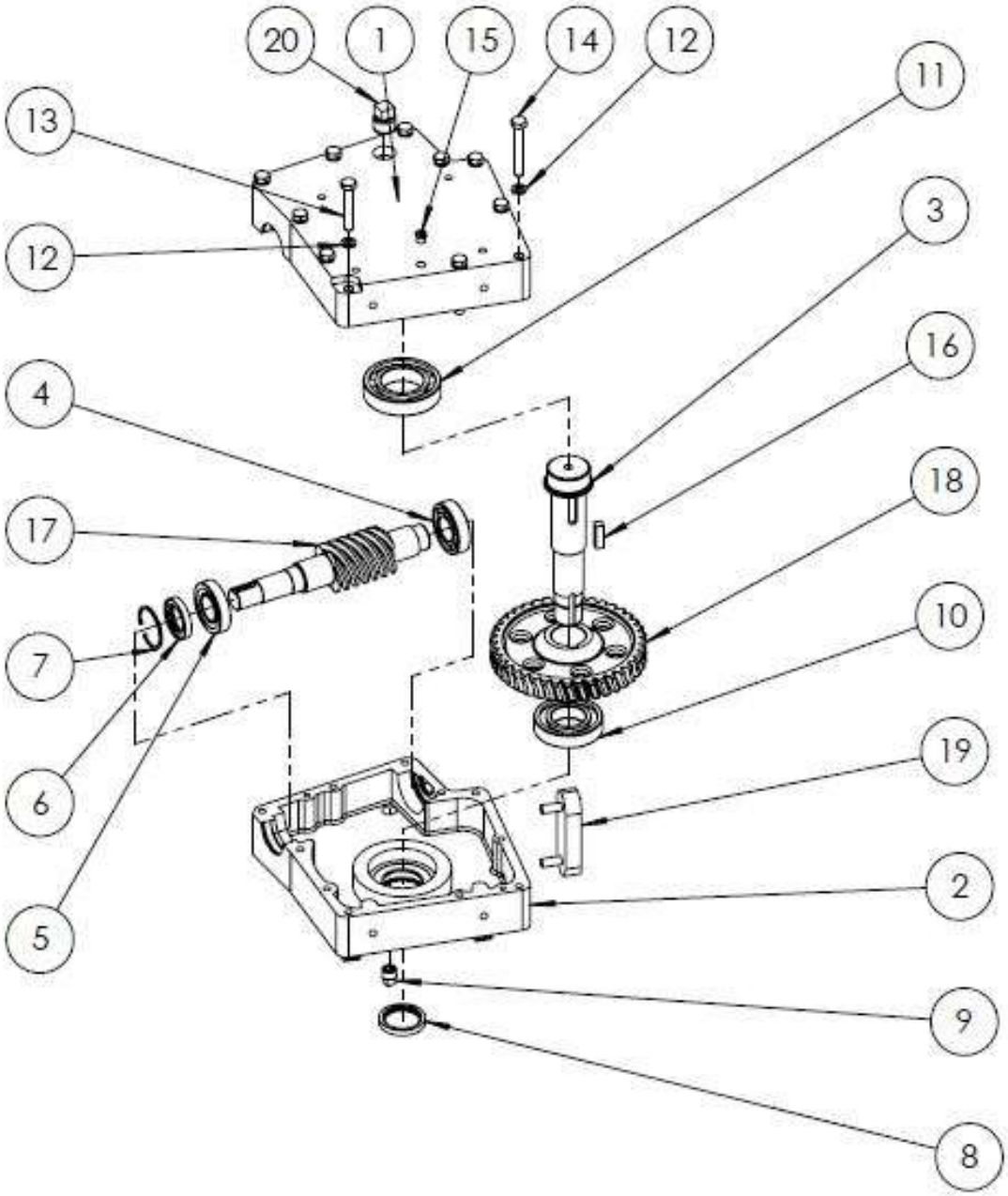

Figure 19: Gearbox Assembly

GEARBOX ASSEMBLY: BRT96 – PARTS LIST 11

Item #	Left Side 16021	Right Side 16020	Description	QTY	Remarks
1	16022	16024	GEARBOX - TOP	1	
2	16023	16025	GEARBOX - BOTTOM	1	
3	16026		MAIN SHAFT	1	
4	13911		WORMSHAFT BEARING	1	
5	13509		TAPER ROLLER BEARING	1	
6	13912		OIL SEAL	1	
7	13913		INTERNAL RETAINING CLIP	1	
8	13967		MAIN SEAL - GEARBOX	1	
9	10911		PLUG 3/8 NPT	1	
10	13910		MAINSHAFT BEARING - BOTTOM	1	
11	13909		MAINSHAFT BEARING - TOP	1	
12	11621		LOCKWASHER 10MM	11	
13	13350		HHCS, M10-1.5 X 60MM LG, ZP	1	
14	13349		HHCS, M10-1.5 X 70MM LG, ZP	10	
15	10909		RELIEF VALVE	1	
16	13919		3/8" SQ, KEY 1.25" LG	1	
17	16028	16030	WORM SCREW	1	
18	16027	16029	WORM WHEEL	1	
19	16144		LEVEL INDICATOR	1	
20	16143		3/4" NPT PLUG	1	

PARTS LIST 12 – RIDE-ON TROWELS

4 BLADE SPIDER PLATE ASSEMBLY: 16016 and 16017
16017 Assembly Shown

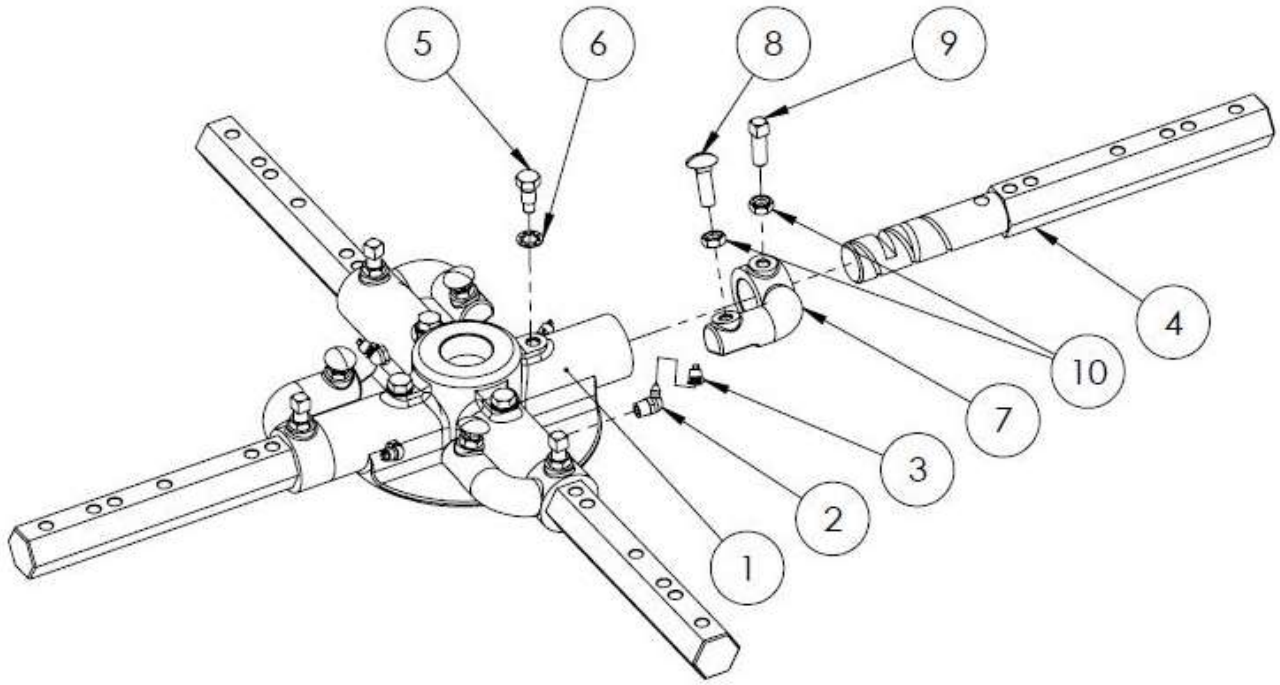

Figure 20: 4 Blade Spider Plate Assembly

4 BLADE SPIDER PLATE ASSEMBLY (GREASE): BRT96 – PARTS LIST 12

Item #	Left Side, CW 16016	Right Side, CCW 16017	Description	QTY	Remarks
1	14159	14160	4 SPOKE SPIDER PLATE	1	
2	10801		GREASE FITTING, 65 DEG, 1/8 NPT	4	
3	10822		CAP GREASE, NIPPLE, 1/8 ALEMITE	4	
4	16015		TITAN SPIDER ARM	4	
5	10806		3/8-UNC DOG POINT BOLT	4	
6	10805		LOCKWASHER, INT. STAR 3/8 STEEL	4	
7	14162	14163	LIFT LEVER	4	
8	10807		CARRIAGE BOLT, 3/8-16X1 1/4"LG	4	
9	10809		SHSS, 3/8-16 X 1" LG. STEEL	4	
10	10808		HEX JAM NUT 3/8-16 UNC	8	

PARTS LIST 13 – RIDE-ON TROWELS

5 BLADE SPIDER PLATE ASSEMBLY: 16150 and 16151
16150 Assembly Shown

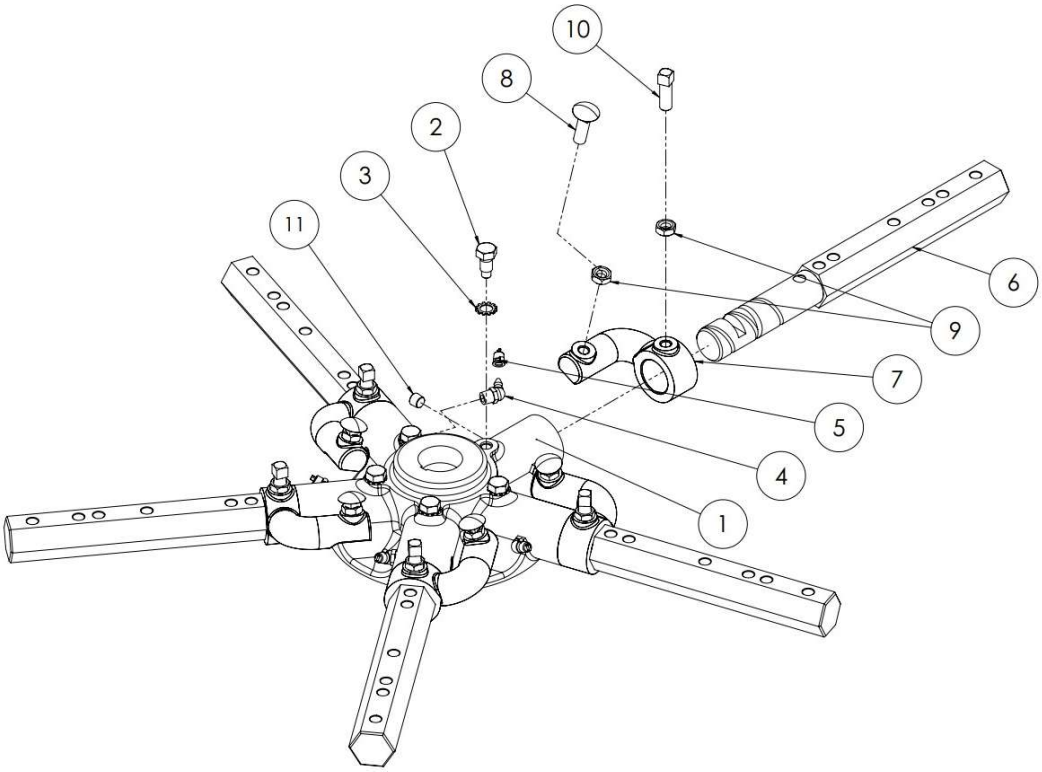

Figure 21: 5 Blade Spider Plate Assembly

5 BLADE SPIDER PLATE ASSEMBLY (GREASE): BRT96 – PARTS LIST 13

Item #	Left Side, CW 16150	Right Side, CCW 16151	Description	QTY	Remarks
1	16108		5 SPOKE SPIDER PLATE	1	
2	10806		3/8-UNC DOG POINT BOLT	5	
3	10805		LOCKWASHER, INT. STAR 3/8 STEEL	5	
4	10801		GREASE FITTING, 65 DEG, 1/8 NPT	5	
5	10822		CAP GREASE, NIPPLE, 1/8 ALEMITE	5	
6	16015		TITAN SPIDER ARM	5	
7	14162	14163	LIFT LEVER	5	
8	10807		CARRIAGE BOLT, 3/8-16X1 1/4"LG	5	
9	10808		HEX JAM NUT 3/8-16 UNC	5	
10	10809		SHSS, 3/8-16 X 1" LG. STEEL	5	
11	30051		1/8” NPT SOCKET HEAD PLUG	5	

PARTS LIST 14 – RIDE-ON TROWELS

PRESSURE PLATE ASSEMBLY: 20626

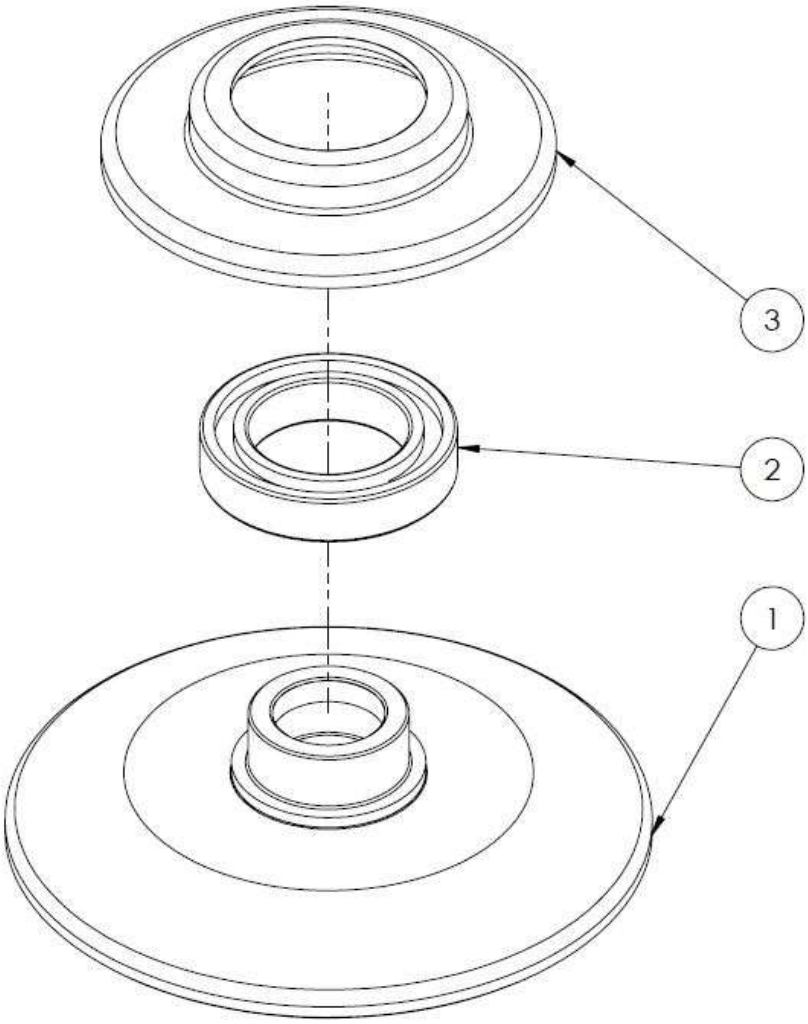

Figure 22: Pressure Plate Assembly

PRESSURE PLATE ASSEMBLY: 20626 – PARTS LIST 14

Item #	Part #	Description	QTY	Remarks
1	10659	LARGE PRESSURE PLATE	1	
2	10663	LARGE THRUST BEARING	1	
3	10667	LARGE PRESSURE PLATE CAP	1	

PARTS LIST 15 – RIDE-ON TROWELS

TROWEL BLADE ASSEMBLY: BRT96
Finish Blades Shown

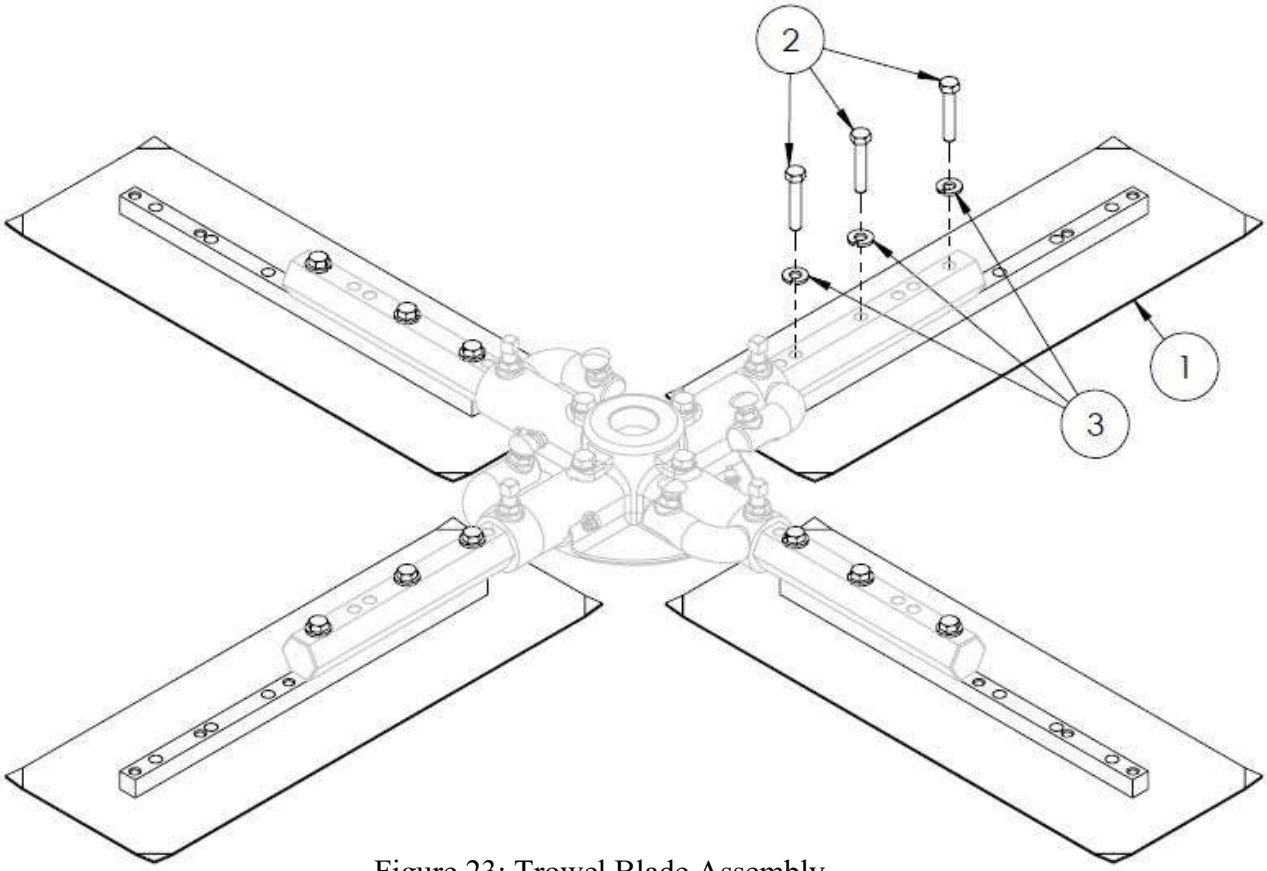

Figure 23: Trowel Blade Assembly

TROWEL BLADE ASSEMBLY: BRT96 (6x18 Finish – 4 Blades) METRIC – PARTS LIST 15

Item #	Part #	Description	QTY	Remarks
1	20662	6X18 METRIC TROWEL BLADE	4	
2	10453	HHCS M8-1.25 X 50MM	8	
3	11614	LOCK WASHER 8MM	8	

TROWEL BLADE ASSEMBLY: BRT96 (8x18 Combo – 4 Blades) – PARTS LIST 15

Item #	Part #	Description	QTY	Remarks
1	20664	6x18 METRIC COMBO BLADE	4	
2	10401	HHCS 5/16-18 x 1-1/2” LG, GRADE 5	8	
3	10402	LOCK WASHER Ø5/16”	8	

PARTS LIST 16 – RIDE-ON TROWELS

WEIGHT PACKAGE (OPTION): 16091
*Can hold up to 12 weights

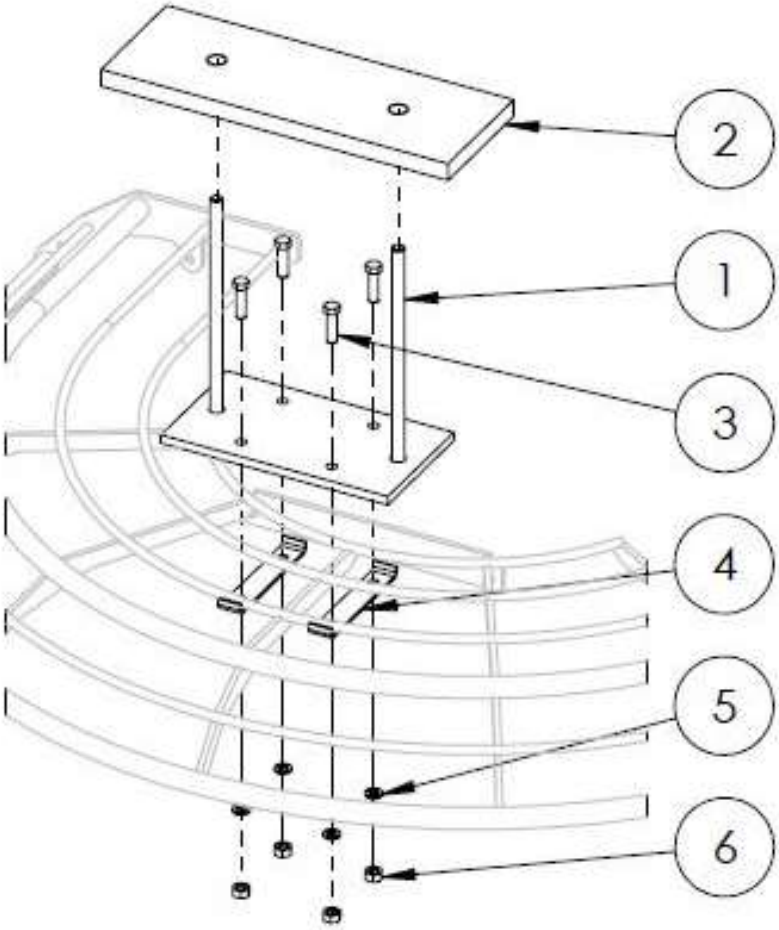

Figure 24: Weight Package Assembly

WEIGHT PACKAGE: 16091 (OPTION) – PARTS LIST 16

Item #	Part #	Description	QTY	Remarks
1	16077	WEIGHT HOLDER	1	
2	16078	WEIGHT 18LB EACH	12	
3	10889	HHCS, M10-1.5 X 30MM LG.	4	
4	16138	BRACKET	2	
5	11621	LOCKWASHER 10MM	4	
6	11622	HEX NUT, M10-1.5	4	

Intentionally Left Blank

PARTS LIST 17 – RIDE-ON TROWELS

RETARDANT SPRAYER (OPTION): 16099

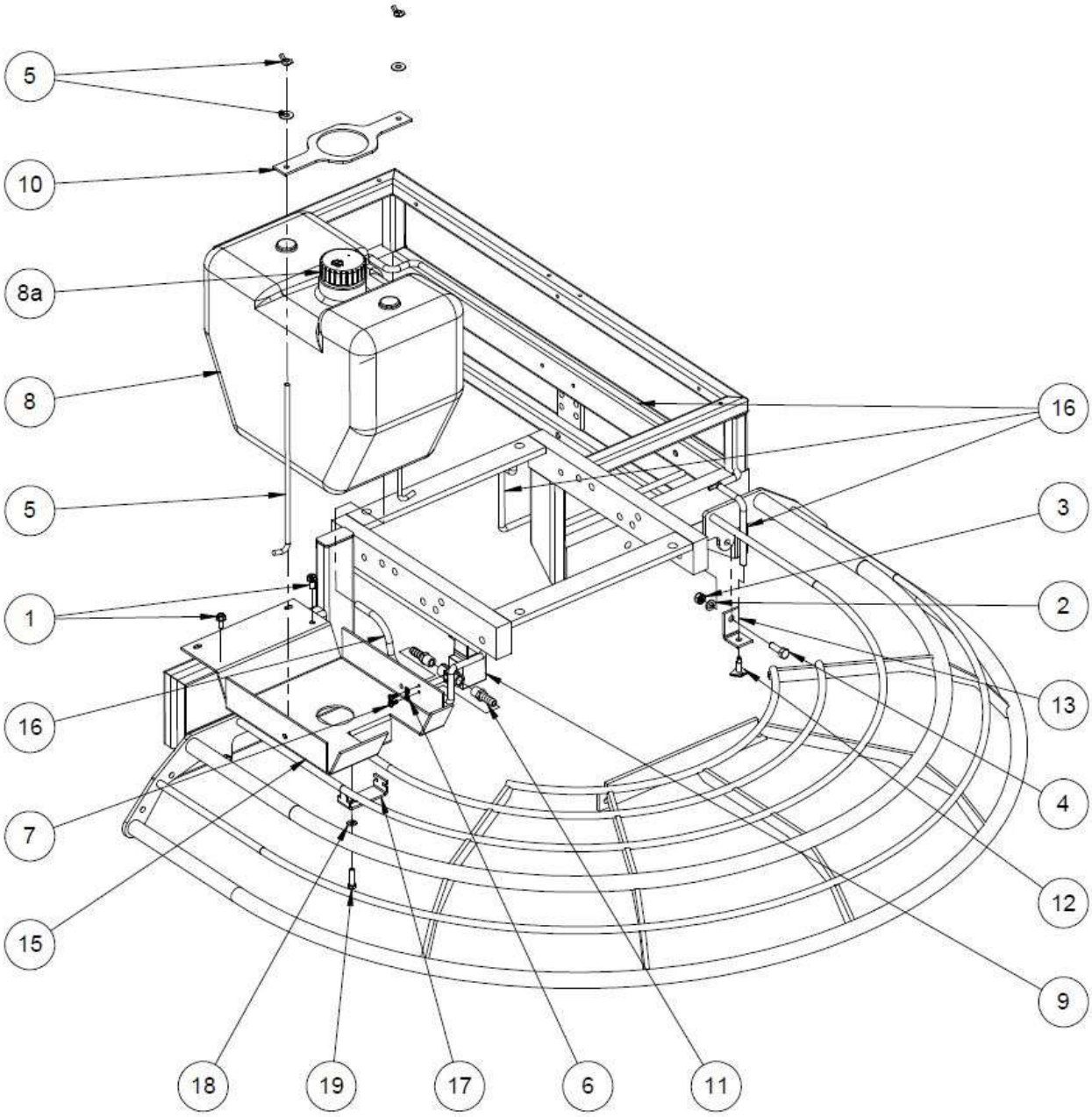

Figure 25: Retardant Sprayer Assembly

RETARDANT SPRAYER: 16099 (OPTION) – PARTS LIST 17

Item #	Part #	Description	QTY	Remarks
1	14596	HWHS 1/4-20 x 1/2"LG THREAD CUTTING	2	
2	11614	LOCK WASHER, M8, ZP	1	
3	11615	NUT, HEX, M8-1.25	1	
4	11619	HHCS, M8-1.25 X 25MM LG	1	
5	13839	HOLD DOWN BOLT w/ WING NUT, WASHER	1	
6	10703	LOCK WASHER, INTERNAL TOOTH, #10	2	
7	11035	PHMS M4-0.7 X 8MM LG	2	
8	18133	SPRAY SYS TANK, ASSEMBLY	1	
8a	18140	SPRAY SYS TANK CAP	1	
9	14234	SOLENOID w/VALVE, 12VDC	1	
10	16155	WATER TANK HOLD DOWN BAR	1	
11	14696	BRASS FITTING - HOSE BARB	2	
12	14179	SPRAY NOZZLE	2	
13	16137	SPRAY NOZZLE BRACKET	2	
14	18143	TEE, 3/16"	1	
15	16124	RETARDANT TANK HOLDER	1	
16		RETARDANT HOSES		
17	16124-3	WATER TANK HOLDER BRACKET	1	
18	11620	LOCKWASHER, M6	1	
19	30281	HHCS, M6-1.0x25MM, ZP	1	
-	13896	SPRAY SWITCH	1	Not Shown

PARTS LIST 18 – RIDE-ON TROWELS

TRANSPORTER (OPTION): 16083

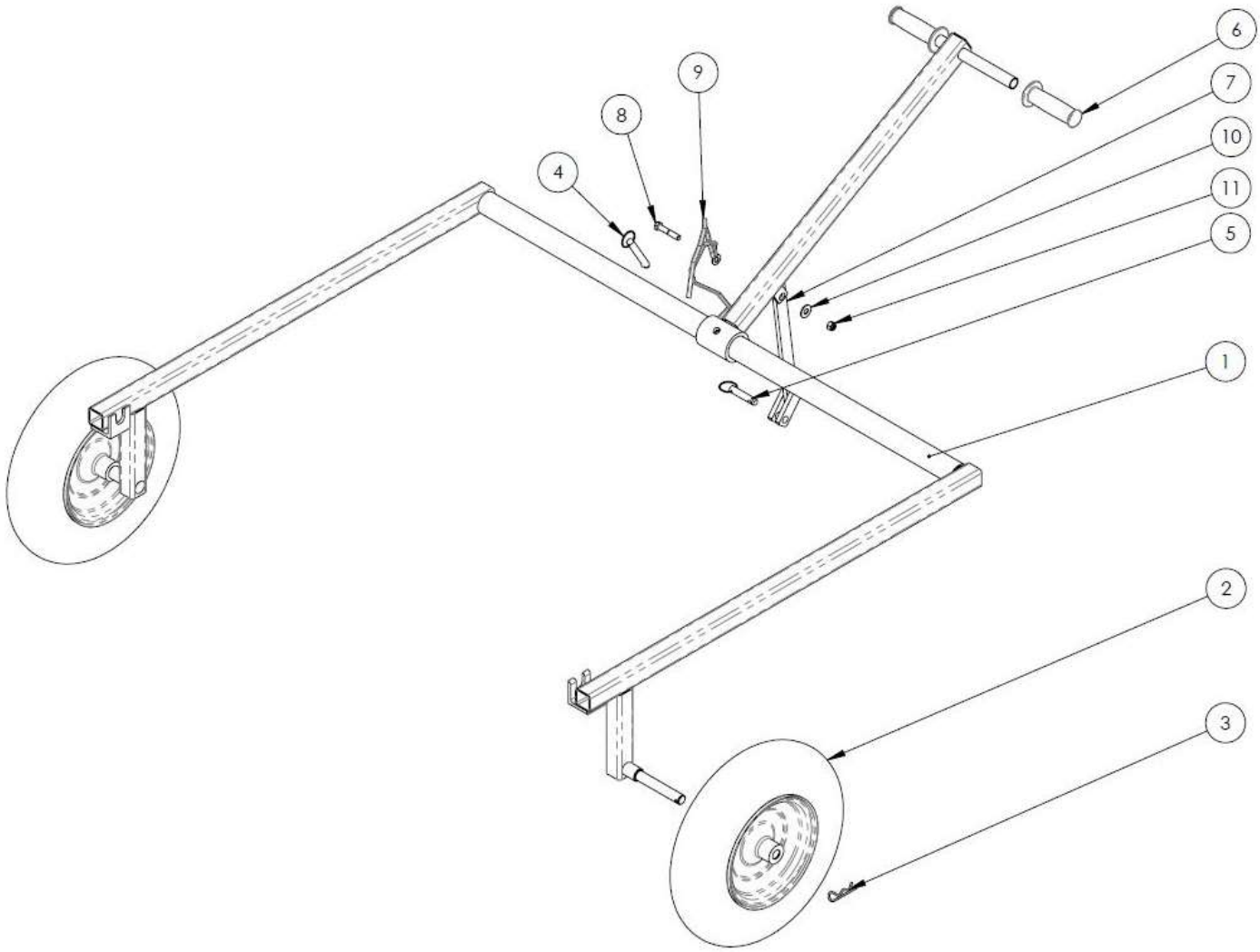

Figure 26: Retardant Sprayer Assembly

TRANSPORTER: 16083 (OPTION) – PARTS LIST 18

Item #	Part #	Description	QTY	Remarks
1	22524	TRANSPORTER FRAME ASSEMBLY	1	
2	13198	WHEEL, PNEUMATIC, TRANSPORTER	2	
3	50265	COTTER PIN 1/8"DIA	2	
4	12487	HITCH PIN LARGE 3-1/2"LG	1	
5	12488	HITCH PIN LARGE 2-1/2"LG	1	
6	10509	HANDLE GRIP	2	
7	16094	TITAN96/88 TRANSPORTER PICKUP BAR	1	
8	12859	HHCS 3/8-16 UNC x 2"LG	1	
9	12860	CHAIN LINK WITH 3/8" WASHER	1	
10	10905	USS FLAT WASHER, 3/8 DIA.	1	
11	10317	3/8-16UNC LOCKNUT, NYLON	1	

CONTRACTOR PROVEN EQUIPMENT SINCE 1946

BARTELL GLOBAL

170 Traders Blvd E
Mississauga, ON L4Z 1W7
Canada

4701 Allmond Avenue
Louisville, KY 40209
United States

200 Commerce Drive
Freehold, NJ 07728
United States

Honeyholes Lane
Dunholme, Lincoln LN2 3SU
United Kingdom

BartellGlobal.com